PUNJAB GOVERNMENT SERVANTS HOUSING FOUNDATION SCHEME, RAWALPINDI.

Bid No. ……

CONSTRUCTION OF MOSQUE AT PUNJAB GOVERNMENT SERVANTS HOUSING SCHEME, RAWALPINDI

VOLUME - I

Procurement Procedure:

Single Stage – Two Envelope

Date: December- 2026

OFFICE OF THE PROJECT DIRECTOR

PGSHS, Adiala Road, Rawalpindi.

Punjab Government Servants Housing Foundation Scheme Rawalpindi

PGSHS, Adiala Road, Rawalpindi

CONSTRUCTION OF MOSQUE AT PUNJAB GOVERNMENT SERVANTS HOUSING SCHEME, RAWALPINDI

TENDER NOTICE

Tenders for the following work is invited from Engineering Firms/ Contractors as per PPRA E-Tendering System. All the Firms/ Contractors can participate in tendering process with following terms and conditions:

1. Intending Contractors/ Firms who have been registered with Pakistan Engineering Council in **Relevant Category** (C-4 or above) **/ Codes** (CE-1, CE-9, CE-10, CE11(vi), CE11(ix) E1, E2, EE-4 & EE-11(vi)) may participate. Contractors/ Firms must have valid renewed PEC License for the Financial Year (2026-27).
2. Contractors/ Firms have to be registered on **Punjab PPRA website (https://ep.punjab.gov.pk/).** Any information/ procedure regarding registration can be seen/ obtained from website ep.punjab.gov.pk.
3. As per PPRA Rules, 2014 (Bid Security), all intending Contractors/ Firms have to submit **Bid Security equal to 5% of the estimated cost only through Digital online payment via the Punjab E-Procurement System (link with BOP)** in favors of the **Project Director PGSH Scheme, Rawalpindi**. Physical Bid Securities (CDR, Pay Order, Demand Draft, etc.) shall not be accepted.
4. As per Clause-56 of PPRA Rule, 2014 (Performance Guarantee), lowest evaluated bidder shall submit **Performance Security/ Guarantee @ 10%** of his Contract Amount within **15-days** of receipt of offer letter in favor of the **Project Director PGSH Scheme, Rawalpindi** ONLY in the form of CDR, Bank Draft, Cashier Cheque, Pay Order or Bank Guarantee (valid for 03 months beyond completion time/ extended completion time); no any other form shall be accepted for Performance Guarantee. Submission of 10% Performance Guarantee is mandatory for all successful bidders irrespective of Estimated **/** Contract amount.
5. Bidders are required to quote item rates against each item as well as total amount against each item and grand total of all items in financial proposal. However, in case of any mathematical difference of total amount of item & grand total, the governing factor towards evaluation would be the rate quoted against items.
6. Rates quoted in percentage above or below of Estimated/ DNIT cost will not be considered/ accepted and bid shall be considered as non-responsive.
7. Basic eligibility criteria will be strictly followed therefore bidders are requested to examine the bidding documents carefully prior to submission of E-bid and attach all the relevant documents as required for the Technical Qualification.
8. After uploading of bids on website (as per timeline detailed at Sr. No. 3), contractors may attend **O/o the Project Director PGSH Scheme, Rawalpindi on 14-12-2026 at 11:30 Hours (11:30 AM),** where all responsive bids will be downloaded and name of the bidders will be announced in the presence of Tender Opening Committee.
9. In case of submission of any fake information(s)/ document(s) such as CDR, PEC License etc., it will be the just cause of disqualification of Contractor/ Firm and disciplinary proceedings

under the rules shall be initiated.

10. The procuring agency may reject all bids or proposal at any time prior to acceptance of a Bid or proposals under Clause-35 of PPRA Rule (Rejection of Bids).

11. Recovery against credit of old material will be adjusted manually and accordingly bids will be evaluated.

12. The Bid validity will be for 60-days.

13. No conditional bid shall be accepted.

14. The URL of the website of the PPRA is (https://ep.punjab.gov.pk/) and response time shall be calculated exclusively from the date of publication of the advertisement on the website of the PPRA.

15. Bids must be uploaded on E-Procurement Portal i.e., https://ep.punjab.gov.pk/ on or before 14-12-2026 at 11:00 Hours (11:00 AM). E-Procurement Portal i.e., https://ep.punjab.gov.pk/ does not allow late submission of the bid after the deadline for submission of bids.

Sr. No.	**Name of Work**	**Estimated Cost & Bid Security (Rs.)**	**Completion Period**	**Opening Date & Time**
1	Construction of Mosque at Punjab Government Servants Housing Foundation Scheme, Rawalpindi.	**Rs. 150,600,762/-** (inclusive of 5% PRA Tax) & **Rs. 7,530,038/-**	09-Months	**14-12-2026 at 11:30 Hours (11:30 AM)**

Project Director,
Punjab Government Servants
Housing Scheme, Rawalpindi.

Punjab Government Servants Housing Foundation Scheme Rawalpindi

PGSHS, Adiala Road, Rawalpindi

No. PGSHF/RWP/PD/ 8678 **Dated: 18.11.2026**

TENDER NOTICE

CONSTRUCTION OF MOSQUE AT PUNJAB GOVERNMENT SERVANTS HOUSING SCHEME, RAWALPINDI

Tenders for the following work is invited from Engineering Firms/ Contractors as per PPRA E-Tendering System. All the Firms/ Contractors can participate in tendering process with following terms and conditions:

1. Intending Contractors/ Firms who have been registered with Pakistan Engineering Council in **Relevant Category** (C-4 or above) **/ Codes** (CE-1, CE-9, CE-10, CE11(vi), CE11(ix) E1, E2, EE-4 & EE-11(vi)) may participate. Contractors/ Firms must have valid renewed PEC License for the Financial Year (2026-27).
2. Contractors/ Firms have to be registered on **Punjab PPRA website (https://ep.punjab.gov.pk/).** Any information/ procedure regarding registration can be seen/ obtained from website ep.punjab.gov.pk.
3. As per PPRA Rules, 2014 (Bid Security), all intending Contractors/ Firms have to submit **Bid Security equal to 5% of the estimated cost only through Digital online payment via the Punjab E-Procurement System (link with BOP)** in favors of the **Project Director PGSH Scheme, Rawalpindi.** Physical Bid Securities (CDR, Pay Order, Demand Draft, etc.) shall not be accepted.
4. As per Clause-56 of PPRA Rule, 2014 (Performance Guarantee), lowest evaluated bidder shall submit **Performance Security/ Guarantee @ 10%** of his Contract Amount within **15-days** of receipt of offer letter in favor of the **Project Director PGSH Scheme, Rawalpindi** ONLY in the form of CDR, Bank Draft, Cashier Cheque, Pay Order or Bank Guarantee (valid for 03 months beyond completion time/ extended completion time); no any other form shall be accepted for Performance Guarantee. Submission of 10% Performance Guarantee is mandatory for all successful bidders irrespective of Estimated / Contract amount.
5. Bidders are required to quote item rates against each item as well as total amount against each item and grand total of all items in financial proposal. However, in case of any mathematical difference of total amount of item & grand total, the governing factor towards evaluation would be the rate quoted against items.
6. Rates quoted in percentage above or below of Estimated/ DNIT cost will not be considered/ accepted and bid shall be considered as non-responsive.
7. Basic eligibility criteria will be strictly followed therefore bidders are requested to examine the bidding documents carefully prior to submission of E-bid and attach all the relevant documents as required for the Technical Qualification.
8. After uploading of bids on website (as per timeline detailed at Sr. No. 3), contractors may attend **O/o the Project Director PGSH Scheme, Rawalpindi on 07-12-2026 at 11:30 Hours (11:30 AM),** where all responsive bids will be downloaded and name of the bidders will be announced in the presence of Tender Opening Committee.
9. In case of submission of any fake information(s)/ document(s) such as CDR, PEC License etc., it will be the just cause of disqualification of Contractor/ Firm and disciplinary proceedings under the rules shall be initiated.
10. The procuring agency may reject all bids or proposal at any time prior to acceptance of a Bid or proposals under Clause-35 of PPRA Rule (Rejection of Bids).
11. Recovery against credit of old material will be adjusted manually and accordingly bids will be evaluated.
12. The Bid validity will be for 60-days.
13. No conditional bid shall be accepted.
14. The URL of the website of the PPRA is (https://punjab.eprocure.gov.pk/View/Tender.aspx) and response time shall be calculated exclusively from the date of publication of the advertisement on the website of the PPRA.
15. Bids must be uploaded on E-Pads Portal i.e., https://eprocure.gov.pk/ on or before 06-12-2026 at 24:00 Hours (12:00 AM). E-Pads Portal i.e., https://eprocure.gov.pk/ does not allow late submission of the bid after the deadline for submission of bids.

Sr. No.	Name of Work	Estimated Cost & Bid Security (Rs.)	Completion Period	Opening Date & Time
1	Construction of Mosque at Punjab Government Servants Housing Foundation Scheme, Rawalpindi.	**Rs. 150,600,762/-** (inclusive of 5% PRA Tax) & **Rs. 7,530,038/-**	09-Months	**07-12-2026 at 11:30 Hours (11:30 AM)**

IPL-12302

Project Director
Punjab Government Servants Housing Scheme,Rawalpindi.

PUNJAB GOVERNMENT SERVANTS HOUSING FOUNDATION SCHEME RAWALPINDI

CORRIGENDUM

The date of receipt of bid and opening of bid for Construction of Mosque at Punjab Government Servants Housing Scheme, Rawalpindi already published in the daily Nawaiwaqt, The news, Jang etc vide IPL # 12302. Website address changed and date is extended as under:-

1. E-pads replaced with the word E-Procurement.
2. Punjab PPRA Website is (https://ep.punjab.gov.pk/) instead of https://eprocure.gov.pk
3. Bids must be uploaded on Punjab PPRA Website on or before 14.12.2026 at 11:00 AM.
4. Opening date and time of bid at 11:30 AM on the same day i.e 14.12.2026.

Other terms and conditions will remain the same.

IPL-12396

PROJECT DIRECTOR
PUNJAB GOVERNMENT SERVANTS HOUSING SCHEME
RAKH DHAMIAL, ADIALA ROAD, RAWALPINDI.

Table of Contents

INSTRUCTIONS TO BIDDERS 10

A. GENERAL 10

IB.1 Scope of Bid 10

IB.2 Source of Funds 10

IB.3 Eligible Bidders 10

IB.4 One Bid per Bidder 11

IB.5 Cost of Bidding 11

IB.6 Site Visit 11

B. BIDDING DOCUMENTS 11

IB.7 Contents of Bidding Documents 11

IB.8 Clarification of Bidding Documents 12

IB.9 Amendment of Bidding Documents 12

C. PREPARATION OF BIDS 12

IB.10 Language of Bid 12

IB.11 Documents Comprising the Bid 13

IB.12 Bid Prices 14

IB.13 Currencies of Bid and Payment 14

IB.14 Bid Validity 14

IB.15 Bid Security 15

IB.16 Alternate Proposals by Bidder 15

IB.17 Pre-Bid Meeting 15

IB.18 Format and Signing of Bid 16

D. SUBMISSION OF BIDS FOR SINGLE STAGE TWO ENVELOPE BIDDING PROCEDURE 17

IB.19 Sealing and Marking of Bids 17

IB.20 Deadline for Submission of Bids 17

IB.21 Late Bids 17

IB.22 Modification, Substitution and Withdrawal of Bids 17

E BID OPENING AND EVALUATION FOR SINGLE STAGE TWO ENVELOPE BIDDING PROCEDUR 18

IB. 23 Bid Opening 18

IB.24 Process to be Confidential 20

IB.25 Clarification of Bids 20

IB.26 Examination of Bids and Determination of Responsiveness 21

IB.27 Correction of Errors 21
IB.28 Evaluation and Comparison of Bids 22
F. AWARD OF CONTRACT 22
IB.29 Award 22
IB.30 Employer's Right to Accept any Bid and to Reject any or all Bids 23
IB.31 Notification of Award 23
IB.32 Performance Security 23
IB.33 Signing of Contract Agreement 24
IB. 34 General Performance of the Bidders 24
IB.35 Integrity Pact 24
IB.36 Instructions not Part of Contract 24
IB.37 PPRA Act, 2009 and PPR-14 will have over-riding effect 24
BID DATA SHEET 26
LETTER OF TECHNICAL BID 35
LETTER OF FINANCIAL BID 37
SPECIAL STIPULATIONS Clause Conditions of Contract 39
FOREIGN CURRENCY REQUIREMENTS 40
PRICE ADJUSTMENT UNDER CONDITIONS OF CONTRACT 41
BILL OF QUANTITIES 42
PROPOSED CONSTRUCTION SCHEDULE 44
METHOD OF PERFORMING THE WORK 45
LIST OF MAJOR EQUIPMENT – RELATED ITEMS 46
EQUIPMENT 47
CONSTRUCTION CAMP AND HOUSING FACILITIES 48
LIST OF SUBCONTRACTORS 50
ESTIMATED PROGRESS PAYMENTS 51
ORGANIZATION CHART FOR THE SUPERVISORY STAFF AND LABOUR 52
INTEGRITY PACT 53
ELIGIBILITY AND TECHNICAL EVALUATION CRITERIA 54
A. ELIGIABILITY CRITERIA – PASS / FAIL 54
B. TECHNICAL QUALIFICATION / GRADING CRITERIA 54
1. GENERAL CONSTRUCTION & SIMILAR PROJECT EXPERIENCE — 40 MARKS 54
2. FINANCIAL SOUNDNESS— 30 MARKS 55
3. KEY PERSONNEL — 20 MARKS 56

4. CRITICAL CONSTRUCTION EQUIPMENT — 5 MARKS 56
5. METHODOLOGY, CONSTRUCTION SCHEDULE AND ORGANIZATION — 5 MARKS 57
TECHNICAL QUALIFICATION RULE 57
FINANCIAL EVALUATION AND AWARD 57
MEMORANDUM OF WORK 59
BID SECURITY 61
FORM OF PERFORMANCE SECURITY 63
FORM OF CONTRACT AGREEMENT 65
MOBILIZATION ADVANCE GUARANTEE 67
INDEMNITY BOND FOR SECURED ADVANCE 69

Part-I: GENERAL CONDITIONS OF CONTRACT ....

Part-II: SPECIAL CONDITIONS OF CONTRACT ....

SPECIFICATIONS –TECHNICAL PROVISIONS ....

DRAWINGS ....

INSTRUCTIONS
TO
BIDDERS

INSTRUCTIONS TO BIDDERS

A. GENERAL

IB.1 Scope of Bid

1.1 The Employer as defined in the Bid data sheet hereinafter called "the Employer" wishes to receive bids for the construction and completion of works and remedying any defects therein as described in these Bidding Documents, and summarized in the Bid data sheet hereinafter referred to as the "Works".

1.2 The successful bidder will be expected to complete the Works within the time specified in Appendix-A to Bid.

IB.2 Source of Funds

2.1 The Employer has applied for/received a loan/credit/scheme from the source (s) indicated in the Bid data sheet in Pak Rupees/ various currencies towards the cost of the project specified in the Bid data sheet and it is intended that the proceeds of this loan/credit/ scheme will be applied to eligible payments under the Contract for which these Bidding Documents are issued.

IB.3 Eligible Bidders

3.1 This Invitation for Bids is open to all bidders meeting the following requirements:

a. Duly licensed by the Pakistan Engineering Council (PEC) Category C-4 or above, valid on the bid submission date and possess all required specialization codes: CE-1, CE-9, CE-10, CE11(vi), CE11(ix) E1, E2, EE-4 & EE-11(vi).
b. Bidder shall have a valid National Tax Number (NTN) and shall be appearing on the applicable Active Taxpayers List (ATL) on the bid submission date.
c. Valid PRA registration, where applicable under prevailing laws and regulations.
d. Bidder shall not be blacklisted, debarred or suspended by PGSHF, PPRA Punjab, PEC, any Federal/Provincial Government department, agency, autonomous body or public-sector organization.
a. Meet the Basic Eligible criteria mention in Bid Data Sheet.
b. A Bidder shall not have a conflict of interest. All Bidders found to have a conflict of interest shall be non-responsive. A Bidder may be considered to have a conflict of interest with one or more parties in this Bidding process, if they:
    i. are associated or have been associated, directly or indirectly with a firm or any of its affiliates which have been engaged by the Procuring Agency to provide consulting services for the preparation of the design and other documents to be used.
    ii. have controlling shareholders in common; or

iii. receive or have received any direct or indirect subsidy from any of them; or
iv. have the same legal representative for purposes of this Bid; or
v. have a relationship with each other, directly or through common third parties, that puts them in a position to have access to information about or influence on the Bid of another Bidder, or influence the decisions of the Procuring Agency regarding this Bidding process;

IB.4 One Bid per Bidder

4.1 Each bidder shall submit only one bid either by himself, or as a partner in a joint venture. A bidder who participates in more than one bid (other than alternatives pursuant to Clause IB.16) will be disqualified.

IB.5 Cost of Bidding

5.1 The bidders shall bear all costs associated with the preparation and submission of their respective bids and the Employer will in no case be responsible or liable for those costs, regardless of the conduct or outcome of the bidding process.

IB.6 Site Visit

6.1 The bidders are advised to visit and examine the Site of Works and its surroundings and obtain for themselves on their own responsibility all information that may be necessary for preparing the bid and entering into a contract for construction of the Works. All cost in this respect shall be at the bidder's own expense.

6.2 The bidders and any of their personnel or agents will be granted permission by the Employer to enter upon his premises and lands for the purpose of such inspection, but only upon the express condition that the bidders, their personnel and agents, will release and indemnify the Employer, his personnel and agents from and against all liability in respect thereof and will be responsible for death or personal injury, loss of or damage to property and any other loss, damage, costs and expenses incurred as a result of such inspection.

B. BIDDING DOCUMENTS

IB.7 Contents of Bidding Documents

7.1 The Bidding Documents, in addition to invitation for bids, are those stated below and should be read in conjunction with any Addenda issued in accordance with Clause IB.9.

1. Instructions to Bidders.
2. Bid data sheet.
3. General Conditions of Contract, Part-I(GCC).
4. Special Conditions of Contract, Part-II(SCC).
5. Specifications – Special Provisions.
6. Specifications – Technical Provisions.

7. Form of Bid & Appendices to Bid, including a Certificate that the bidder is not currently blacklisted by the Procuring Agency.
8. Bill of Quantities (Appendix-D to Bid).
9. Form of Bid Security.
10. Form of Contract Agreement.
11. **Forms of Performance Security, Mobilization Advance, Bank Guarantee and Secured Advance.**
12. Drawings.

7.2 The bidders are expected to examine carefully the contents of all the above documents. Failure to comply with the requirements of bid submission will be at the Bidder's own risk. Pursuant to Clause IB.26, bids which are not substantially responsive to the requirements of the Bidding Documents will be rejected.

IB.8 Clarification of Bidding Documents

8.1 Any prospective bidder requiring any clarification (s) in respect of the Bidding Documents may notify the Employer in writing at the Employer's address indicated in the Invitation for Bids. The Employer will respond to any request for clarification which he receives **prior** to the deadline for submission of bids. The exact number of days will be mentioned in the Bid Data Sheet keeping in view the time given for submission of bids.
Copies of the Employer's response will be forwarded to all purchasers of the Bidding Documents, including a description of the enquiry but without identifying its source.

IB.9 Amendment of Bidding Documents

9.1 At any time at least three days prior to the deadline for submission of bids, the Employer may, for any reason, whether at his own initiative or in response to a clarification requested by a prospective bidder, modify the Bidding Documents by issuing addendum.

9.2 Any addendum thus issued shall be part of the Bidding Documents pursuant to IB 7.1 hereof and shall be communicated in writing to all purchasers of the Bidding Documents, **at least three (03) days prior to the closing date of submission of the bid.** Prospective bidders shall acknowledge receipt of each addendum in writing to the Employer.

9.3 To afford prospective bidders reasonable time in which to take an addendum into account in preparing their bids, the Employer may extend the deadline for submission of bids in accordance with Clause IB.20

C. PREPARATION OF BIDS

IB.10 Language of Bid

10.1 The bid and all correspondence and documents related to the bid exchanged by a bidder and the Employer shall be in the bid language stipulated in the Bid data sheet and Special Conditions of Contract. Supporting documents and printed literature furnished by the bidders may be in any other language provided the same are accompanied by an accurate translation of the relevant parts in the bid language, in

which case, for purposes of evaluation of the bid, the translation in bid language shall prevail.

IB.11 Documents Comprising the Bid

11.1 The Bid shall comprise two envelopes submitted simultaneously, one called the Technical Bid and the other the Financial Bid, containing the documents listed in Bid data sheet under the heading of IB 11.1 A & B respectively. Both envelopes to be enclosed together in an outer single envelope called the Bid. Each bidder shall furnish all the documents as specified in Bid data sheet 11.1 A & B. The Bids shall be submitted through E-Procurement Portal i.e., **https://ep.punjab.gov.pk/** as mentioned in the bid data sheet.

11.2 Bids submitted by a JV shall include a copy of the Joint Venture Agreement entered into by all partners. Alternatively, a Letter of Intent to execute a Joint Venture Agreement in the event of a successful bid shall be signed by all partners and submitted with the bid, together with a copy of the proposed agreement. The role to be played by each partner to be specified therein**; and the concerned partner should have the requisite qualification/ experience to successfully execute the assigned task.** Bids submitted by a joint venture of two (2) or more firms shall also comply with the following requirements:

(a) In case of a successful bid, the Form of JV Agreement shall be signed so as to be legally binding on all partners within 7 days of the receipt of letter of acceptance failing which the contract and the letter of acceptance shall stand void and redundant.

(b) One of the joint venture partners shall be nominated as being in charge/ lead partner; and this authorization shall be evidenced by submitting a power of attorney signed by legally authorized signatories of all the joint venture partners;

(c) The partner-in-charge/ lead partner shall always be duly authorized to deal with the Employer regarding all matters related with and/or incidental to the execution of Works as per the terms and Conditions of JV Agreement and in this regard to incur any and all liabilities, receive instructions, give binding undertakings and receive payments on behalf of the joint venture;

(d) All partners of the joint venture shall at all times and under all circumstances be liable jointly and severally for the execution of the Contract in accordance with the Contract terms; and, a statement to this effect shall be included in the authorization mentioned under Sub-Para (b) above as well as in the Form of Bid and in the Form of JV Agreement (in case of a successful bid); and

(e) A copy of JV agreement shall be submitted before signing of the Contract, stating the conditions under which JV will function, its period of duration, the persons authorized to represent and obligate it and which persons will be directly responsible for due performance of the Contract and can give valid receipts on behalf of the joint venture, the proportionate participation of the several firms forming the joint venture, and any other information necessary to permit a full appraisal of its functioning. The JV Agreement shall be made part of the contract. No amendments / modifications whatsoever in the joint

venture agreement shall be agreed to between the joint venture partners without prior written consent of the Employer.

11.3 The Bidder shall furnish, as part of the Technical Bid, a Technical Proposal including a statement of work methods, equipment, personnel, schedule, **qualification/ experience required to successfully execute the individually assigned tasks** and any other information as stipulated in Bidding Forms, in sufficient detail to demonstrate the adequacy of the Bidders' proposal to meet the work requirements and the completion time referred to in Sub-Clause 1.2 hereof.

IB.12 Bid Prices

12.1 Unless stated otherwise in the Bidding Documents, the Contract shall be for the whole of the Works as described in IB 1.1 hereof, based on the unit rates and / or prices submitted by the bidder.

12.2 The bidders shall fill in rates and prices for all items of the Works described in the Bill of Quantities. Items against which no rate or price is entered by a bidder will not be paid for by the Employer when executed and shall be deemed covered by rates and prices for other items in the Bill of Quantities.

12.3 All duties, taxes and other levies payable by the Contractor under the Contract, or for any other cause, as on the date **of opening of the bids** shall be included in the rates and prices and the total Bid Price submitted by a bidder.
Additional / reduced duties, taxes and levies due to subsequent additions or changes in legislation shall be reimbursed / deducted as per Sub-Clause 70.2 of the General Conditions of Contract Part-I.

IB.13 Currencies of Bid and Payment

13.1 The unit rates and the prices shall be quoted by the bidder entirely in Pak rupees. A bidder expecting to incur expenditures in other currencies for inputs to the Works supplied from outside the Employer's country (referred to as the "Foreign Currency Requirements") shall indicate the same in Appendix-B to Bid. However, subject to GCC clause 71.1, payments in foreign currency are not permissible.

13.2 The rates of exchange to be used by the bidder for currency conversion shall be the TT & OD Selling Rates published or authorized by the State Bank of Pakistan prevailing on the date **of opening of the bids.** For the purpose of payments, the exchange rates used in bid preparation shall apply for the duration of the Contract. Rule 32(2) of PPR-14 shall be applicable for rate of exchange of foreign currencies.

IB.14 Bid Validity

14.1 Bids shall remain valid for the period stipulated in the Bid data sheet after the Date of Bid Opening specified in Clause IB.23.

14.2 In exceptional circumstances, prior to expiry of the original bid validity period, the Employer may request that the bidders extend the period of validity for a specified additional period which shall in no case be more than the original bid validity period or 180 days whichever is more. The request and the responses thereto shall be made in writing. A bidder may refuse the request without forfeiting his Bid Security. A bidder agreeing to the request will not be required or permitted to modify his bid, but will be required to extend the validity of his Bid Security for the period of the extension, and in compliance with Clause IB.15 in all respects. Rule 28 of PPR-14 shall be applicable for Bid Validity period.

IB.15 Bid Security

15.1 As per PPRA Rules, 2014 (Bid Security), all intending Contractors/ Firms have to submit **Bid Security equal to 5% of the estimated cost only through Digital online payment via the Punjab E-Procurement System (link with BOP)** in favors of the **Project Director PGSH Scheme, Rawalpindi**. Physical Bid Securities (CDR, Pay Order, Demand Draft, etc.) shall not be accepted.

15.6 The Bid Security may be forfeited:

(a) If the bidder withdraws his bid except as provided in IB 22.1;

(b) If the bidder does not accept the correction of his Bid Price pursuant to IB 27.2 hereof; or

(c) In the case of successful bidder, if he fails within the specified time limit to:

(i) Furnish the required Performance Security;

(ii) Sign the Contract Agreement, or

(iii) Furnish the required JV agreement within 7 days of the receipt of letter of acceptance.

IB.16 Alternate Proposals by Bidder

16.1 No alternate proposals are allowed in single stage two envelope method.

IB.17 Pre-Bid Meeting

17.1 The Employer may, on his own motion or at the request of any prospective bidder(s), hold a pre-bid meeting to clarify issues and to answer any questions on matters related to the Bidding Documents. The date, time and venue of pre-bid meeting, if convened, is as stipulated in the Bid data sheet. All prospective bidders or their authorized representatives shall be invited to attend such a pre-bid meeting.

17.2 The bidders are requested to submit questions, if any, in writing so as to reach the Employer not later than seven (7) days before the proposed pre-bid meeting.

17.3 Minutes of the pre-bid meeting, including the text of the questions raised and the replies given, will be transmitted without delay to all purchasers of the Bidding Documents. Any modification of the Bidding Documents listed in IB 7.1 hereof, which may become necessary as a result of the pre-bid meeting shall be made by

the Employer exclusively through the issue of an Addendum pursuant to Clause IB.9 and not through the minutes of the pre-bid meeting.

17.4 Absence at the pre-bid meeting will not be a cause for disqualification of a bidder.

IB.18 Format and Signing of Bid

18.1 The Bidders shall prepare an original and the number of copies of the Bid indicated in the Bid Data Sheet, clearly marking each "ORIGINAL BID" and "COPY OF BID," as appropriate. In the event of any discrepancy between them, the original shall prevail.

18.2 The Bidders shall authorize a person/ person for signing, submission and further correspondence with Procuring Agency on behalf of Bidders / Service Providers. Authority letter must be part of bid. However, in case of any issue Bidders shall be responsible for all consequences.

18.3 The original and the copy or copies of the Bid shall be typed or written in indelible ink and shall be signed by the Bidders or a person duly authorized to bind the Bidders to the contract. All pages of the Bid, shall be signed and stamped by the authorized person.

18.4 Any interlineation, erasures, or overwriting shall be valid only if the authorized person for signing the Bid initials them.

18.5 The original Bid shall be typed or written in indelible ink and shall be signed by the Bidders or a person duly authorized to sign on behalf of the Bidders / Service Providers. This authorization shall consist of a written confirmation as specified in the **BDS** and shall be attached to the Bid. The name and position held by each person signing the authorization must be typed or printed below the signature. All pages of the Bid including bank statement, audited reports etc., shall be signed and stamped by the authorized person.

18.6 Any interlineations, erasures, or overwriting shall be valid only if they are signed by the person or persons signing the Bidders / Service Providers.

18.7 The Bidders / Service Providers shall furnish information as described in the Form of Bid on commissions or gratuities, if any, paid or to be paid to agents relating to this Bid and to contract execution if the Bidders is awarded the contract.

18.8 Bidders are particularly directed that the amount entered on the Letter of Financial Bid shall be for performing the Contract strictly in accordance with the Bidding Documents.

18.9 All appendices to Bid are to be properly completed and signed.

18.10 No alteration is to be made in the Financial Bids and Technical Bids nor in the Appendices thereto except in filling up the blanks as directed. If any such alterations be made or if these instructions be not fully complied with, the bid may be rejected.

18.11 Bidders shall indicate in the space provided in the Letter of Technical and Financial Bids, their full and proper addresses at which notices may be legally served on them and to which all correspondence in connection with their bids and the Contract is to be sent.

18.12 Bidders should retain a copy of the Bidding Documents as their file copy.

18.13 The Bidders / Service Providers adhere to the minimum wage rate (notified by Labor & Human Resource Department) and all applicable taxes (imposed by FBR/PRA/any other government organization) while preparing financial bid.

D. SUBMISSION OF BIDS FOR SINGLE STAGE TWO ENVELOPE BIDDING PROCEDURE

IB.19 Sealing and Marking of Bids

19.1 The Bids shall be submitted through E-Procurement Portal i.e., https://ep.punjab.gov.pk/ as mentioned in the bid data.

IB.20 Deadline for Submission of Bids

20.1 a) Bids must be uploaded on E-Procurement Portal i.e., https://ep.punjab.gov.pk/ as mentioned in the in the Bid Data Sheet.

(b) The Procuring Agency may, at its discretion and as per rule 29 of PPR-14, extend this deadline for the submission of Bids by amending the Bidding documents in accordance with ITB Clause 2.2.2 & 2.2.3 in which case all rights and obligations of the Procuring Agency and Bidders previously subject to the deadline will thereafter be subject to the deadline as extended.

(c) Bids shall be received by the Procuring Agency at the address specified under BDS no later than the date and time specified in the BDS.

20.2 The Employer may, at his discretion, extend the deadline for submission of Bids by issuing an amendment in accordance with Clause IB.9, in which case all rights and obligations of the Employer and the bidders previously subject to the original deadline will thereafter be subject to the deadline as extended.

IB.21 Late Bids

21. (a) **E-Procurement Portal** i.e., https://ep.punjab.gov.pk/ does not allow late submission of the bid after the deadline for submission of bids.

IB.22 Modification, Substitution and Withdrawal of Bids

22.1 Any bidder may modify**,** substitute or withdraw his bid after bid submission provided that the modification, substitution or written notice of withdrawal is received by the Employer prior to the deadline for submission of bids.

22.2 The modification, substitution, or notice for withdrawal of any bid shall be prepared, sealed, marked and delivered in accordance with the provisions of Clause IB.19 with the outer and inner envelopes additionally marked “MODIFICATION”, “SUBSTITUTION” or “WITHDRAWAL” as appropriate.

22.3 No bid may be modified by a bidder after the deadline for submission of bids except in accordance with IB 22.1 and 27.2.

22.4 Withdrawal of a bid during the interval between the deadline for submission of bids and the expiration of the period of bid validity specified in the Form of Bid may result in forfeiture of the Bid Security in pursuance to Clause IB.15.

E BID OPENING AND EVALUATION FOR SINGLE STAGE TWO ENVELOPE BIDDING PROCEDUR

IB. 23 Bid Opening

23.1 The Employer will open the Technical Bids in public at the address, date and time specified in the Bid data sheet in the presence of Bidders` designated representatives and anyone who choose to attend. The Financial Bids will remain unopened and will be held in custody of the Employer until the specified time of their opening.

23.2 First, envelopes marked “WITHDRAWAL” shall be opened and read out and the envelope with the corresponding bid shall not be opened, but returned to the Bidder. No bid withdrawal shall be permitted unless the corresponding Withdrawal Notice contains a valid authorization to request the withdrawal and is read out at bid opening.

23.3 Second, outer envelopes marked “SUBSTITUTION” shall be opened. The inner envelopes containing the Substitution Technical Bid and/or Substitution Financial Bid shall be exchanged for the corresponding envelopes being substituted, which are to be returned to the Bidder unopened. Only the Substitution Technical Bid, if any, shall be opened, read out, and recorded. Substitution Financial Bid will remain unopened in accordance with IB 23.1. No envelope shall be substituted unless the corresponding Substitution Notice contains a valid authorization to request the substitution and is read out and recorded at bid opening.

23.4 Next, outer envelopes marked “MODIFICATION” shall be opened. No Technical Bid and/or Financial Bid shall be modified unless the corresponding Modification Notice contains a valid authorization to request the modification and is read out and recorded at the opening of Technical Bids. Only the Technical Bids, both Original as well as Modification, are to be opened, read out, and recorded at the opening. Financial Bids, both Original and Modification, will remain unopened in accordance with IB 23.1. The Bidders’ representatives who are present shall be requested to sign the record. The omission of a Bidder’s signature on the record shall not invalidate

the contents and effect of the record. A copy of the record shall be distributed to all Bidders.

23.5 Other envelopes holding the Technical Bids shall be opened one at a time, and the following read out and recorded:

(a) the name of the Bidder;
(b) whether there is a modification or substitution;
(c) the presence of a Bid Security, if required; and
(d) Any other details as the Employer may consider appropriate.

No Bid shall be rejected at the opening of Technical Bids except for late bids, in accordance with IB 21.1. Only Technical Bids read out and recorded at bid opening, shall be considered for evaluation.

Preliminary Examination of Technical Bids

23.6 a) The Employer shall first examine qualification and experience Data as per appendix M and N submitted by the Bidder. The technical proposal examination of those bidders only shall be taken in hand who meet the minimum requirement as mentioned in appendix M and N. Only substantially responsive qualification shall be considered for further evaluation.

b) The Employer shall examine the Technical Bid to confirm that all the documents have been provided, and to determine the completeness of each document submitted.

23.7 The Employer shall confirm that all the documents and information have been provided for evaluation of Technical Bid as required under these bidding documents.

23.8 At the end of the evaluation of the Technical Bids, the Employer will invite only those bidders who have submitted substantially responsive Technical Bids and who have been determined as being qualified for award to attend the opening of the Financial Bids.

The date, time, and location of the opening of Financial Bids will be advised in writing by the Employer. Bidders shall be given reasonable notice for the opening of Financial Bids.

23.9 The Employer will notify Bidders in writing who have been rejected on the grounds of their Technical Bids being substantially non-responsive to the requirements of the Bidding Document and return their Financial Bids unopened as per rule 38(2)(a)(vii) of PPR-14.

23.10 The Employer shall conduct the opening of Financial Bids of all Bidders who submitted substantially responsive Technical Bids, publically in the presence of

Bidders` representatives who choose to attend at the address, date and time specified by the Employer. The Bidder's representatives who are present shall be requested to sign a register evidencing their attendance.

23.11 All envelopes containing Financial Bids shall be opened one at a time and the following read out and recorded:

(a) The name of the Bidder;

(b) Whether there is a modification or substitution;

(c) The Bid Prices, including any discounts; and

(d) Any other details as the Employer may consider appropriate.

Only Financial Bids and discounts, read out and recorded during the opening of Financial Bids shall be considered for evaluation. No Bid shall be rejected at the opening of Financial Bids.

23.12 If this Bidding Document allows Bidders to quote separate prices for different contracts, and the award to a single Bidder of multiple contracts, the methodology to determine the lowest evaluated price of the contract combinations is that which is most economical to the Employer.

IB.24 Process to be Confidential

24.1 Information relating to the examination, clarification, evaluation and comparison of bid and recommendations for the award of a contract shall not be disclosed to bidders or any other person not officially concerned with such process before the announcement of final bid evaluation report which shall be done at least 10 days prior to the award of Contract. The announcement to all Bidders will include table(s) comprising read out prices, discounted prices, price adjustments made (if applicable), final evaluated prices and recommendations against all the bids evaluated. Any effort by a bidder to influence the Employer's processing of bids or award decisions may result in the rejection of such bidder's bid. Whereas any bidder feeling aggrieved may lodge a written complaint not later than ten 10 days after the announcement of Technical and Financial Bids. No bidder will be allowed to file grievance petition w.r.t. Technical Evaluation after announcement/ uploading of Financial Evaluation Report. However mere fact of lodging a complaint shall not warrant suspension of the procurement process.

IB.25 Clarification of Bids

25.1 To assist in the examination, evaluation and comparison of bids, the Employer may, at his discretion, ask any bidder for clarification of his bid, including breakdowns of unit rates. The request for clarification and the response shall be in writing but no change in the price or substance of the bid shall be sought, offered or permitted except as required to confirm the correction of arithmetic errors discovered by the Employer in the evaluation of the bids in accordance with Clause IB.28.

25.2 If a Bidder does not provide clarifications of its Bid by the date and time set in the Employer's request for clarification, its bid may be rejected. Rule 33 of PPR-14 shall be applicable for clarifications.

IB.26 Examination of Bids and Determination of Responsiveness

26.1 Prior to the detailed evaluation of bids, the Employer will determine whether each bid is substantially responsive to the requirements of the Bidding Documents.

26.2 A substantially responsive bid is one which (i) meets the eligibility criteria; (ii) has been properly signed; (iii) is accompanied by the required Bid Security; (iv) Includes signed Integrity Pact where required as per clause IB.35; and (v) conforms to all the terms, conditions and specifications of the Bidding Documents, without material deviation or reservation (vi) meets the qualification criteria as specified in Appendix-M. A material deviation or reservation is one (i) which affect in any substantial way the scope, quality or performance of the Works; (ii) which limits in any substantial way, inconsistent with the Bidding Documents, the Employer's rights or the bidder's obligations under the Contract; (iii) adoption/rectification whereof would affect unfairly the competitive position of other bidders presenting substantially responsive bids. Only substantially responsive bid shall be considered for further evaluation.

26.3 If a bid is not substantially responsive, it may not subsequently be made responsive by correction or withdrawal of the non-conforming material deviation or reservation. The Employer may, however, seek confirmation/ clarification in writing which shall be responded in writing.

IB.27 Correction of Errors

27.1 Bids determined to be substantially responsive will be checked by the Employer for any arithmetic errors. Errors will be corrected by the Employer as follows:

(a) Where there is a discrepancy between the amounts in figures and in words, the amount in words will govern; and

(b) Where there is a discrepancy between the unit rate and the line item total resulting from multiplying the unit rate by the quantity, the unit rate as quoted will govern, unless in the opinion of the Employer there is an obviously gross misplacement of the decimal point in the unit rate, in which case the line-item total as quoted will govern and the unit rate will be corrected.

27.2 The amount stated in the Letter of Financial Bid will be adjusted by the Employer in accordance with the above procedure for the correction of errors and with the concurrence of the bidder, shall be considered as binding upon the bidder. If the bidder does not accept the corrected Bid Price, his Bid will be rejected, and the Bid Security shall be forfeited in accordance with IB.15.6 (b) hereof.

IB.28 Evaluation and Comparison of Bids

28.1 The Employer will evaluate and compare only the Bids determined to be substantially responsive in accordance with Clause IB.26.

28.2 In evaluating the Bids, the Employer will determine for each Bid the evaluated Bid Price by adjusting the Bid Price as follows:

(a) Making any correction for errors pursuant to Clause IB.27;

(b) Excluding Provisional Sums and the provision, if any, for contingencies in the Summary Bill of Quantities, but including competitively priced Day work; and

(c) Making an appropriate adjustment for any other acceptable variation or deviation.

28.3 The estimated effect of the price adjustment provisions of the Conditions of Contract, applied over the period of execution of the Contract, shall not be taken into account in Bid evaluation.

28.4 If the Bid of the successful bidder is seriously unbalanced in relation to the Employer's estimate of the cost of work to be performed under the Contract, the Employer may require the bidder to produce detailed price analyses for any or all items of the Bill of Quantities to demonstrate the internal consistency of those prices with the construction methods and schedule proposed. After evaluation of the price analyses, the Employer may require that the amount of the Performance Security set forth in Clause IB.32 be increased at the expense of the successful bidder to a level sufficient to protect the Employer against financial loss in the event of default of the successful bidder under the Contract.

F. AWARD OF CONTRACT

IB.29 Award

29.1 Subject to Clauses IB.30 and IB.34, the Employer will award the Contract to the bidder whose bid has been determined to be substantially responsive to the Bidding Documents and who has offered the lowest evaluated Bid Price, provided that such bidder has been determined to be eligible in accordance with the provisions of Clause IB.3 and qualify pursuant to IB 29.2.

29.2 The Employer, at any stage of the bid evaluation, having credible reasons for or prima facie evidence of any defect in bidder's capacities, may require the bidders to provide information concerning their professional, technical, financial, legal or managerial competence whether already pre-qualified or not:

Provided that such qualification shall only be laid down after recording reasons in writing. They shall form part of the records of that bid evaluation report.

IB.30 Employer's Right to Accept any Bid and to Reject any or all Bids

30.1 Notwithstanding Clause IB.29, the Employer reserves the right to accept or reject any Bid by giving reasons, and to annul the bidding process and reject all bids, at any time prior to the acceptance of any bid or proposal, without thereby incurring any liability to the affected bidders or any obligation except that the grounds for rejection of all bids shall upon request be communicated to any bidder who submitted a bid, without justification of grounds. Rejection of all bids shall be notified to all bidders promptly.

IB.31 Notification of Award

31.1 Prior to expiration of the period of bid validity prescribed by the Employer, the Employer will notify the successful bidder in writing ("Letter of Acceptance") that his Bid has been accepted. This letter shall name the sum which the Employer will pay the Contractor in consideration of the execution and completion of the Works by the Contractor as prescribed by the Contract (hereinafter and in the Conditions of Contract called the "Contract Price").

31.2 No Negotiation with the bidder having evaluated as lowest responsive or any other bidder shall be permitted. However, the lowest evaluated bidder may further reduce the Bid Price voluntarily without compromising the quality/ quantity.

31.3 The notification of award and its acceptance by the bidder will constitute the formation of the Contract, binding the Employer and the bidder till signing of the formal Contract Agreement.

31.4 Upon furnishing by the successful bidder of a Performance Security, the Employer will promptly notify the other bidders that their Bids have been unsuccessful and return their bid securities. No bid security can be returned without exhausting the grievance period or without finally disposing off the complaint of the non-responsive bidder. However, bid security may be returned earlier if any bidder submits affidavit that he is satisfied with the proceedings and hence his bid security may be returned.

IB.32 Performance Security

32.1 The successful bidder shall furnish to the Employer a Performance Security (@10% of his contract amount) in the form and the amount stipulated in the Bid data sheet and the Conditions of Contract within a period of 15 days after the receipt of Letter of Acceptance. On submission of Performance Security, the bid security of the successful bidder may be returned.

32.2 Failure of the successful bidder to comply with the requirements of IB.32.1 or IB.33 or IB.35 shall constitute sufficient grounds for the annulment of the award and forfeiture of the Bid Security. Rule 56 of PPR-14 shall be applicable for performance Security.

IB.33 Signing of Contract Agreement

33.1 Within 14 days from the date of furnishing of acceptable Performance Security under the Conditions of Contract, the Employer will send the successful bidder the Contract Agreement in the form provided in the Bidding Documents, incorporating all agreements between the parties.

33.2 The formal Agreement between the Employer and the successful bidder shall be executed within 14 days of the receipt of the Contract Agreement by the successful bidder from the Employer.

IB. 34 General Performance of the Bidders

The Employer reserves the right to obtain information regarding performance of the bidders on their previously awarded contracts/works. The Employer may in case of consistent poor performance of any Bidder as reported by the employers of the previously awarded contracts, interalia, reject his bid and/or refer the case to the concerned forum(s). Upon such reference, the concerned forum(s) in accordance with its rules, procedures and relevant laws of the land take such action as may be deemed appropriate under the circumstances of the case including black listing of such Bidder and debarring him from participation in future bidding for similar works.

IB.35 Integrity Pact

The Bidder shall sign and stamp the Integrity Pact provided at Appendix-L to Bid in the Bidding Documents for all procurement contracts exceeding Rupees ten Million. Failure to provide such Integrity Pact shall make the bidder non-responsive.

IB.36 Instructions not Part of Contract

Bids shall be prepared and submitted in accordance with these Instructions which are provided to assist bidders in preparing their bids, and do not constitute part of the Bid or the Contract Documents. Submission of Bids shall be construed as evidence that the bidder has admitted all provisions of the Instruction to the Bidders.

IB.37 PPRA Act, 2009 and PPR-14 will have over-riding effect

PPRA Act, 2009 and PPR-14 as amended up to date will supersede and will have an over-riding effect in case in case of any contradiction with these Instructions, the Contract or any other part of the Bidding Documents.

BID DATA SHEET

BID DATA SHEET

Construction of Mosque at Punjab Government Servants Housing Scheme, Rawalpindi

<table>
<tr><th>IB Clause</th><th>Particular</th><th>Finalized Bid Data</th></tr>
<tr><td>1.1</td><td>Name and address of the Employer</td><td>Punjab Government Servants Housing Foundation (PGSHF), Government of the Punjab Engineering Wing, 299-B, PGSHS, Mohlanwal Scheme, Lahore.</td></tr>
<tr><td>1.1</td><td>Name of Project & Summary of Works</td><td>Construction of Mosque at Punjab Government Servants Housing Scheme, Rawalpindi. The Works comprise complete construction of the proposed Jamia Mosque including civil, structural, architectural, finishing, plumbing, sanitary, water supply, sewerage/drainage, electrical and allied works, complete in all respects in accordance with the Drawings, Specifications, BOQ and directions of the Engineer.</td></tr>
<tr><td>2.1</td><td>Source of Financing / Funding Agency</td><td>Punjab Government Servants Housing Foundation (PGSHF) – Own Resources / Own Funds.</td></tr>
<tr><td>2.1</td><td>Amount and type of financing</td><td>Financing shall be provided from PGSHF's own resources.</td></tr>
<tr><td>3.1</td><td>Eligible Bidders</td><td>
<table>
<tr><th>S. #</th><th>Criterion</th><th>Finalized Minimum Requirement</th><th>Documentary Evidence / Verification</th><th>Evaluation</th></tr>
<tr><td>1.</td><td>PEC Constructor License</td><td>Valid PEC Constructor License Category C-4 or above, valid on the bid submission date.</td><td>Copy of valid PEC Constructor License.</td><td>Pass / Fail</td></tr>
<tr><td>2.</td><td>PEC Specialization Codes</td><td>Bidder shall possess all required specialization codes: CE-1,</td><td>Valid PEC license showing the required specialization</td><td>Pass / Fail</td></tr>
</table>
</td></tr>
</table>

		CE-9, CE-10, CE11(vi), CE11(ix) E1, E2, EE-4 & EE-11(vi).	codes.	
3.	**NTN / FBR Registration & ATL Status**	Bidder shall have a valid National Tax Number (NTN) and shall be appearing on the applicable Active Taxpayers List (ATL) on the bid submission date.	NTN/FBR registration and evidence of current ATL status.	Pass / Fail
4.	**Punjab Revenue Authority Registration**	Valid PRA registration, where applicable under prevailing laws and regulations.	Copy of valid PRA registration certificate.	Pass / Fail
5.	**Blacklisting / Debarment / Suspension**	Bidder shall not be blacklisted, debarred or suspended by PGSHF, PPRA Punjab, PEC, any Federal/Provincial Government department, agency, autonomous body or public-sector organization.	Signed and stamped affidavit/certificate of non-blacklisting, non-debarment and non-suspension.	Pass / Fail
6.	**Conflict of Interest**	Bidder shall have no conflict of interest as defined under IB.3 of the Bidding	Signed declaration regarding conflict of interest.	Pass / Fail

				Documents. A bidder found to have a conflict of interest shall be treated as non-responsive.		
		7.	**One Bid per Bidder**	Each bidder shall participate in only one Bid, either individually or as a JV partner, in accordance with IB.4. Participation in more than one Bid shall result in disqualification.	Verification from submitted bids/JV documents.	Pass / Fail
		8.	**Authorization of Signatory**	The person signing and submitting the Bid shall be duly authorized to commit the Bidder.	Valid **Power of Attorney / written authorization** in favour of the authorized signatory.	Pass / Fail
		9.	**Joint Venture Requirements**	The Bidder shall submit the required JV Agreement or Letter of Intent to form JV, together with the applicable Power of Attorney and details of JV members.	JV Agreement / Letter of Intent and Power of Attorney, where applicable.	Pass / Fail
		10.	**Bid Security**	Technical Bid shall include Bid Security of **PKR. 7,530,038.00** in the	Original Bid Security in prescribed acceptable form.	Pass / Fail

		prescribed form and valid for at least 30 days beyond the 60-day Bid Validity period.		
11.	**Average Annual Construction Turnover**	Minimum average annual construction turnover of PKR 150 Million, calculated from certified construction turnover during the last three (03) completed financial years.	Audited Financial Statements for last three (03) completed financial years.	Pass / Fail
12.	**Immediate Financial Resources**	Minimum PKR 40 Million available through working capital and/or unutilized project-specific line of credit, subject to compliance with the financial capacity assessment under Appendix-M.	Latest audited financial statements, working-capital calculation and bank-certified line of credit, where relied upon.	Pass / Fail
13.	**Pending Litigation**	Bidder shall disclose all pending litigation, including relevant particulars and financial implications. The	Completed pending-litigation statement/declaration with supporting information, where applicable.	Pass / Fail

				information shall be assessed together with the Bidder's financial and contractual capacity.		
		14.	**Key Personnel**	Bidder shall provide the minimum required qualified and experienced key personnel specified in Appendix-N / personnel schedule for execution of the Works.	Personnel schedule, one-page CV for each key staff, qualifications, PEC registration where applicable and experience certificate along with last three-month salary slips be provided as documentary evidences.	Pass / Fail
		15.	**Integrity Pact**	Bidder shall submit a duly signed and stamped Integrity Pact in the prescribed format.	Completed Appendix-L – Integrity Pact.	Pass / Fail
		16.	**Letter of Technical Bid**	Bidder shall submit the prescribed Letter of Technical Bid, duly completed, signed and stamped by the authorized signatory.	Original signed and stamped Letter of Technical Bid.	Pass / Fail
8.1	**Time limit for clarification**	Requests for clarification shall reach the Employer not later than seven (07) days prior to the deadline for submission of Bids, i.e. by **14 December, 2026.** Clarifications shall be submitted in writing to the Employer at the address stated above.				

10.1	**Bid Language**	English.
11.1(A)	**Documents comprising the Technical Bid**	The Technical Bid shall contain: (a) Letter of Technical Bid; (b) Bid Security of **PKR. 7,530,038.00**; (c) Power of Attorney / written authorization of signatory; (d) Valid PEC Constructor Licence in Category C-4 or above; (e) valid PEC specialization codes CE-1, CE-9, CE-10, CE11(vi), CE11(ix) E1, E2, EE-4 & EE-11(vi); (f) valid NTN/FBR registration and evidence of Active Taxpayer status; (g) valid PRA registration, where applicable; (h) affidavit/certificate regarding non-blacklisting, non-debarment and non-suspension; (i) declaration regarding conflict of interest; (j) pending litigation information; (k) JV Agreement/Letter of Intent and Power of Attorney, where applicable; (l) Appendix-A – Special Stipulations; (m) Appendix-E – Proposed Construction Schedule; (n) Appendix-F – Method of Performing the Work; (o) Appendix-G – Availability of Critical Equipment; (p) Appendix-H – Construction Camp and Housing Facilities; (q) Appendix-I – Proposed Subcontractors, if any; (r) Appendix-K – Organization Chart for Supervisory Staff and Labour; (s) Appendix-L – Integrity Pact; (t) Appendix-M – Eligibility and Technical Evaluation Criteria
11.1(B)	**Documents comprising the Financial Bid**	(a) Letter of Financial Bid; (b) Appendix-D – Priced Bill of Quantities
13.1	**Currency of**	The Bidder shall quote all unit rates, prices and the Total Bid

	Bid	Price entirely in Pakistani Rupees (PKR). Foreign currency payment shall not be applicable.
14.1	**Period of Bid Validity**	60 days from the deadline for submission of Bids.
15.1	**Amount of Bid Security**	**PKR. 7,530,038.00/- (Rupees Seven Million Five Hundred Thirty Thousands and Thirty Eight Only**). As per PPRA Rules, 2014 (Bid Security), all intending Contractors/ Firms have to submit **Bid Security equal to 5% of the estimated cost only through Digital online payment via the Punjab E-Procurement System (link with BOP)** in favors of the **Project Director PGSH Scheme, Rawalpindi**. Physical Bid Securities (CDR, Pay Order, Demand Draft, etc.) shall not be accepted.
17.1	**Pre-Bid Meeting**	No formal Pre-Bid Meeting is proposed. Bidders are advised to visit and inspect the Site in accordance with Clause IB.6 before submission of their Bids. Any clarification shall be sought within the period specified under BDS Clause 8.1.
18.4	**Number of copies of Bid**	One (01) Copy of the online submitted Technical Bid Document, properly sealed be submitted to the office of Project Director PGSH Scheme, Rawalpindi on the date of opening of Technical Bid.
19.2(a)	**Employer's address for Bid submission**	**Office of Project Director, Punjab Government Servants Housing Foundation Scheme Adiala Road, Rawalpindi .**
19.2(b)	**Name and Number of Contract**	**Construction of Mosque at Punjab Government Servants Housing Scheme, Rawalpindi.**
20.1(a)	**Deadline for submission of Bids**	Bids must be uploaded on E-Procurement Portal i.e., https://ep.punjab.gov.pk/ on or before **14-12-2026 at 11:00 Hours (11:00 AM). E-Procurement Portal** i.e., https://ep.punjab.gov.pk/ does not allow late submission of the bid after the deadline for submission of bids.

23.1	**Venue, time and date of Technical Bid opening**	**Office of Project Director, Punjab Government Servants Housing Foundation Scheme Adiala Road, Rawalpindi on 14-12-2026 at 11:30 Hours (11:30 AM).**
23.8–23.10	**Opening of Financial Bids**	Financial Bids of only those bidders whose Technical Bids are determined to be substantially responsive and qualified shall be opened publicly on a date, time and venue to be communicated subsequently by the Employer in accordance with the Punjab Procurement Rules and the Bidding Documents.
32.1	**Performance Security**	The performance guarantee shall be submitted as per PPRA Rules 56. The Employer, at any stage of the bid evaluation, having credible reasons for or prima facie evidence of any defect in Bidder's capacities, may require the Bidder to provide information concerning their professional, technical, financial, legal or managerial competence whether already declared substantially responsive. The successful bidder shall furnish Performance Security equal to ten percent (10%) of the Contract Price. The Performance Security shall be in the form of an unconditional Bank Guarantee from a Scheduled Bank in Pakistan, CDR or Demand Draft, acceptable to the Employer, and shall be furnished within the period prescribed in the Bidding Documents. Guarantees issued by insurance companies shall not be accepted.

Letters of Technical Bid/ Financial Bid,
And
Appendices to Bid

LETTER OF TECHNICAL BID

Date: .....

Bid Reference No: .....
(Name of Contract/Works)

To:.....

We, the undersigned, declare that:

(a) We have examined and have no reservations to the Bidding Documents, including Addenda issued in accordance with Instructions to Bidders (IB). Complete bidding document is binding upon us and we fully understand that the PPRA Act, 2009 and the PPR-14 as amended upto date supercedes this bidding document, in case of any contradiction, and the same are also binding upon us;

(b) We offer to execute and complete in conformity with the Bidding Documents the following Works:……..

(c) Our Bid consisting of the Technical Bid and the Financial Bid shall be valid for a period of …… days from the date fixed for the bid submission deadline in accordance with the Bidding Documents, and it shall remain binding upon us and may be accepted at any time before the expiration of that period;

(d) As security for due performance of the under takings and obligations of our bid, we submit here with a Bid security, in the amount specified in Bid data sheet, which is valid (at least) 30 days beyond validity of Bid itself.

(e) We are not participating, as a Bidder or as a subcontractor, in more than one bid in this bidding process.

(f) We agree to permit Employer or its representative to inspect our accounts and records and other documents relating to the bid submission and to have them audited by auditors. This permission is extended for verification of any information provided in our Technical Bid which comprises all documents enclosed herewith in accordance with IB.11.1 of the Bid data sheet.

Name .....

In the capacity of .....

Signed .....

.....

Duly authorized to sign the Bid for and on behalf of .....

Date .....

Address……..

LETTER OF FINANCIAL BID

Date: .....

Bid Reference No: .....
(Name of Contract/Works)

To:.....

We, the undersigned, declare that:

(a) We have examined and have no reservations to the Bidding Documents, including Addenda issued in accordance with Instructions to Bidders (IB)9;

(b) The total price of our Bid, excluding any discounts offered in item (c) below is:……

(c) The discounts offered and the methodology for their application are:……..

(d) Our Bid shall be valid for a period of …….. days from the date fixed for the bid submission deadline in accordance with the Bidding Documents, and it shall remain binding upon us and may be accepted at any time before the expiration of that period;

(e) If our Bid is accepted, we commit to obtain a performance security in accordance with the Bidding Documents;

(f) We understand that this bid, together with your written acceptance thereof included in your notification of award, shall constitute a binding contract between us, until a formal contract is prepared and executed and we do hereby declare that the Bid is made without any collusion, comparison of figures or arrangement with any other bidder for the Works.

(g) We understand that you are not bound to accept the lowest evaluated bid or any other bid that you may receive.

(h) We agree to permit Employer or its representative to inspect our accounts and

records and other documents relating to the bid submission and to have them audited by auditors. This permission is extended for verification of any information provided in our Technical Bid which comprises all documents enclosed herewith in accordance with IB.11.1 of the Bid data sheet.

(i) If awarded the contract, the person named below shall act as Contractor's Representative.

Name .....

In the capacity of .....

Signed .....
.....

Duly authorized to sign the Bid for and on behalf of .....

Date .....

Address……..

SPECIAL STIPULATIONS
Clause Conditions of Contract

1	**Law Applicable**	-	The laws applicable in the Province of Punjab, Pakistan, including the PPRA Act, 2009 and Punjab Procurement Rules, 2014, as amended from time to time.
2	**Amount of Performance Security**	07	10% of the Contract Price stated in the Letter of Acceptance.
3	**Time for Furnishing Programme**	08	Within 14 days from the date of receipt of the Letter of Acceptance.
4	**Minimum Amount of Third Party Insurance**	-	Rs. 5,000,000/- per occurrence, with the number of occurrences unlimited.
5	**Time for Commencement**	35	The Contractor shall commence the Works within 14 days from receipt of the Engineer's Notice to Commence. The Notice to Commence shall be issued within 14 days after signing of the Contract Agreement, subject to fulfilment of the contractual requirements for commencement.
6	**Time for Completion**	36	270 calendar days (Nine Months) from the date of receipt of the Engineer's Notice to Commence.
7	**Liquidated Damages for Delay**	39	0.10% of the Contract Price per calendar day of delay in completion of the Works, subject to a maximum of 10% of the Contract Price stated in the Letter of Acceptance.
8	**Bonus for Early Completion**	-	Not Applicable. No bonus shall be payable for completion before the specified Time for Completion.
9	**Defects Liability Period**	43	365 days from the effective date of the Taking-Over Certificate.
10	**Percentage of Retention Money**	BN-1 & 48	5% of the amount of each Interim Payment Certificate.
11	**Limit of Retention Money**	BN-1	Maximum 5% of the Contract Price stated in the Letter of Acceptance.
12	**Minimum Amount of Interim Payment Certificate / Running Bill**	BN-1	11% of the Contract Price, after applicable deductions.
13	**Time of Payment**	46-48	Within 42 days from delivery of the Engineer's duly certified Interim Payment Certificate to the Employer, subject to the provisions of the Contract.
14	**Mobilization Advance**	-	An interest-free Mobilization Advance of 15% of the Contract Price stated in the Letter of Acceptance, against an unconditional Mobilization Advance Bank Guarantee for the full amount of the advance: (i) First Part: 10% before commencement of the Works; and (ii) Second Part: 5% within 42 days from payment of the First Part, subject to deployment of adequate staff, equipment and plant, establishment of required site facilities.

FOREIGN CURRENCY REQUIREMENTS

(NOT APPLICABLE)

1. The Bidder may indicate here in below his requirements of foreign currency (if any), with reference to various inputs to the Works.

2. Foreign Currency Requirement as percentage of the Bid Price excluding Provisional Sums _____%.

3. Table of Exchange Rates

Unit of Currency	**Equivalent in Pak. Rupees**
Australian Dollar	----------
Euro	----------
Japanese Yen	----------
U.K. Pound	----------
U.S. Dollars	----------
----------	----------
----------	----------

Appendix-C to Bid

PRICE ADJUSTMENT UNDER CONDITIONS OF CONTRACT

(NOT APPLICABLE)

The source of indices and the weightages or coefficients for use in the adjustment formula shall be as follows:
(To be filled by the Employer)

Cost Element	Description	Weightages	Applicable index
1	2	3	4
(i)	Fixed Portion		
(ii)	Local Labor (Skilled & Unskilled) With unskilled as representative items.		Rates issued by Finance Department, Government of Punjab
(iii)	Cement – in bags. Portland cement shall be considered representative items for all types of cement.		" " "
(iv)	Reinforcing Steel. ½ "diameter round bar is the representative item for all types of steel to be used in this project.		" " "
(v)	High Speed Diesel (HSD)		" " "
(vi)	Bricks		.
(vii)	Bitumen		" " "
(viii)			" " "
	Total	1.000	" " "

Notes:

1) Indices for "(ii)" to "(vii)" are taken from Rates issued by Finance Department, Government of Punjab. The base cost indices or prices shall be those applying on the date for submission of bids. Current indices o prices shall be those applying 30 days prior to the last day of the billing period.

2) Any fluctuation in the indices or prices of materials other than those given above shall not be subject to adjustment of the Contract Price.

3) Fixed portion shown here is for typical road project, Employer to determine the weightage of Fixed Portion considering only those cost elements having cost impact of seven (7) percent or more on his specific project.

(Employers using this price adjustment provisions may add or delete any elements as deemed appropriate to the project.)

BILL OF QUANTITIES

A. Preamble

1. The Bill of Quantities shall be read in conjunction with the Conditions of Contract, Specifications and Drawings.

2. The quantities given in the Bill of Quantities are estimated and provisional, and are given to provide a common basis for bidding. The basis of payment will be the actual quantities of work executed and measured by the Contractor and verified by the Engineer and valued at the rates and prices entered in the priced Bill of Quantities, where applicable, and otherwise at such rates and prices as the Engineer may fix in accordance with provisions of the Contract.

3. The rates and prices entered in the priced Bill of Quantities shall, except insofar as it is otherwise provided under the Contract include all costs of Contractor's plant, labour, supervision, materials, execution, insurance, profit, taxes and duties, together with all general risks, liabilities and obligations set out or implied in the Contract. Furthermore, all duties, taxes and other levies payable by the Contractor under the Contract, or for any other cause, as on the date for submission of Bids, shall be included in the rates and prices and the total Bid Price submitted by the Bidder.

4. A rate or price shall be entered against each item in the priced Bill of Quantities, whether quantities are stated or not. The cost of items against which the Contractor will have failed to enter a rate or price shall be deemed to be covered by other rates and prices entered in the Bill of Quantities.

5. The whole cost of complying with the provisions of the Contract shall be included in the items provided in the priced Bill of Quantities, and where no items are provided, the cost shall be deemed to be distributed among the rates and prices entered for the related items of the Works.

6. General directions and description of work and materials are not necessarily repeated nor summarised in the Bill of Quantities. References to the relevant sections of the Bidding Documents shall be made before entering prices against each item in the priced Bill of Quantities.

7. Provisional sums included and so designated in the Bill of Quantities shall be expended in whole or in part at the direction and discretion of the Engineer in accordance with Sub-Clause 58.2 of Part I, General Conditions of Contract.

Appendix-D to Bid

BILL OF QUANTITIES

B. Work Items

Refer to Volume – III Bill of Quantities

PROPOSED CONSTRUCTION SCHEDULE

Pursuant to Sub-Clause 43.1 of the General Conditions of Contract, the Works shall be completed on or before the date stated in Appendix-A to Bid. The Bidder shall provide as Appendix-E to Bid, the Construction Schedule in the bar chart (CPM, PERT or any other to be specified herein) showing the sequence of work items and the period of time during which he proposes to complete each work item in such a manner that his proposed programme for completion of the whole of the Works and parts of the Works may meet Employer's completion targets in days noted below and counted from the date of receipt of Engineer's Notice to Commence (Attach sheets as required for the specified form of Construction Schedule):

	Description	**Time for Completion**
a)	Whole Works	_____days
b)	Part-A	_____days (If applicable)
c)	Part-B	_____days (If applicable)
d)	_____	_____days
e)	_____	_____ days

METHOD OF PERFORMING THE WORK

The Bidder is required to submit a narrative outlining the method of performing the Work. The narrative should indicate in detail and include but not be limited to:

1. Organization Chart indicating head office and field office personnel involved in management and supervision, engineering, equipment maintenance and purchasing.

2. Mobilization in Pakistan, the type of facilities including personnel accommodation, office accommodation, provision for maintenance and for storage, communications, security and other services to be used.

3. The method of executing the Works, the procedures for installation of equipment and machinery and transportation of equipment and materials to the site.

4. Quality control / Quality assurance measures to be adopted including procedures to be followed for carrying out all tests required under specifications.

LIST OF MAJOR EQUIPMENT – RELATED ITEMS

The Bidder will provide a list of all major equipment and related items, under separate heading for items owned, to be purchased or to be arranged on lease by him to carry out the Works. The information shall include make, type, capacity, and anticipated period of utilization for all equipment which shall be in sufficient detail to demonstrate fully that the equipment will meet all requirements of the Specifications.

LIST OF MAJOR EQUIPMENT

Owned Purchased or Leased	Description of Unit (Make, Model, Year)	Capacity HP Rating	Condition	Present Location or Source	Date of Delivery at Site	Period of Work on Project
1	**2**	**3**	**4**	**5**	**6**	**7**
a. Owned						
b. To be Purchased						
c. To be arranged on Lease						

EQUIPMENT

The Bidder must demonstrate that it has the key equipment listed hereafter:

No.	PLANT/EQUIPMENT				
	Equipment Type and Characteristics	**Total Nos. available**	**Under Utilization on other projects, if applicable**	**Nos. waiting to be shifted to new project(s)**	**Min. Number Required for this Project**
1					
2					
3					
4					
5					
6					

CONSTRUCTION CAMP AND HOUSING FACILITIES

The Contractor in accordance with Clause 34 of the Conditions of Contract shall provide description of his construction camp's facilities and staff housing requirements.

The Contractor shall be responsible for pumps, electrical power, water and electrical distribution systems, and sewerage system including all fittings, pipes and other items necessary for servicing the Contractor's construction camp.

The Bidder shall list or explain his plans for providing these facilities for the service of the Contract as follows:

1. Site Preparation (clearing, land preparation, etc.).

2. Provision of Services.

    a) Power (expected power load, etc.).

    b) Water (required amount and system proposed).

    c) Sanitation (sewage disposal system, etc.).

3. Construction of Facilities

    a) Contractor's Office. Workshop and Work Areas (areas required and proposed layout, type of construction of buildings, etc.).

    b) Warehouses and Storage Areas (area required, type of construction and layout).

    c) Housing and Staff Facilities (Plans for housing for proposed staff, layout, type of construction, etc.).

4. Construction Equipment Assembly and Preparation (detailed plans for carrying out this activity).

5. Other Items Proposed (Security services, etc.). The Contractor should mention here what are his proposed environmental measures for the project as per EPA rules like treatment of wastewater and water quality etc. The Contractor shall submit a detailed EMP (Environmental Management Plan) to describe how materials are removed from site and disposed off at a safe location, prevention for the contamination of ground and surface water in neighboring areas etc. including remedial measures for adoption.

6. Detail of testing Lab with testing equipment etc.

LIST OF SUBCONTRACTORS

I/We intend to subcontract the following parts of the Work to subcontractors. In my/our opinion, the subcontractors named hereunder are reliable and competent to perform that part of the work for which each is listed.

Enclosed are documentation outlining experience of subcontractors, the curriculum vitae and experience of their key personnel who will be assigned to the Contract, equipment to be supplied by them, size, location and type of contracts carried out in the past.

Part of Works **(Give Details)**	**Subcontractor** **(With Complete Address)**
1	2

ESTIMATED PROGRESS PAYMENTS

Bidder's estimate of the value of work, which would be executed by him during each of the periods stated below, based on his Programme of the Works and the Rates in the Bill of Quantities, expressed in thousands of Pakistani Rupees:

Quarter/ Year/ Period	**Amounts (1,000 Rs.)**
1	**2**
1st Quarter	
2nd Quarter	
3rd Quarter	
4th Quarter	
……	
……	
……	
……	
……	
Bid Price	

ORGANIZATION CHART FOR THE SUPERVISORY STAFF AND LABOUR

BL-1
Appendix-L to Bid

INTEGRITY PACT

DECLARATION OF FEES, COMMISSION AND BROKERAGE ETC. PAYABLE BY THE SUPPLIERS OF GOODS, SERVICES & WORKS IN CONTRACTS WORTH RS. 10.00 MILLION OR MORE

Contract No._____ Dated _____
Contract Value: _____
Contract Title: _____

…… [Name of Supplier] hereby declares that it has not obtained or induced the procurement of any contract, right, interest, privilege or other obligation or benefit from Government of the Punjab (GoPb) or any administrative subdivision or agency thereof or any other entity owned or controlled by GoPb through any corrupt business practice.

Without limiting the generality of the foregoing, [name of Supplier] represents and warrants that it has fully declared the brokerage, commission, fees etc. paid or payable to anyone and not given or agreed to give and shall not give or agree to give to anyone within or outside Pakistan either directly or indirectly through any natural or juridical person, including its affiliate, agent, associate, broker, consultant, director, promoter, shareholder, sponsor or subsidiary, any commission, gratification, bribe, finder's fee or kickback, whether described as consultation fee or otherwise, with the object of obtaining or inducing the procurement of a contract, right, interest, privilege or other obligation or benefit in whatsoever form from GoPb, except that which has been expressly declared pursuant hereto.

[Name of Supplier] certifies that it has made and will make full disclosure of all agreements and arrangements with all persons in respect of or related to the transaction with GoPb and has not taken any action or will not take any action to circumvent the above declaration, representation or warranty.

[Name of Supplier] accepts full responsibility and strict liability for making any false declaration, not making full disclosure, misrepresenting facts or taking any action likely to defeat the purpose of this declaration, representation and warranty. It agrees that any contract, right, interest, privilege or other obligation or benefit obtained or procured as aforesaid shall, without prejudice to any other rights and remedies available to GoPb under any law, contract or other instrument, be voidable at the option of GoPb.

Notwithstanding any rights and remedies exercised by GoPb in this regard, [name of Supplier] agrees to indemnify GoPb for any loss or damage incurred by it on account of its corrupt business practices and further pay compensation to GoPb in an amount equivalent to ten time the sum of any commission, gratification, bribe, finder's fee or kickback given by [name of Supplier] as aforesaid for the purpose of obtaining or inducing the procurement of any contract, right, interest, privilege or other obligation or benefit in whatsoever form from GoPb.

Name of Employer: ……	Name of Contractor: ……
Signature: ……..	Signature: ……
[Seal]	[Seal]

ELIGIBILITY AND TECHNICAL EVALUATION CRITERIA

A. ELIGIABILITY CRITERIA – PASS / FAIL

Please refer to clause 3.1 of Bid Data Sheet.

B. TECHNICAL QUALIFICATION / GRADING CRITERIA

Total Marks: 100
Minimum Qualifying Marks: 70

Sr. No.	Evaluation Factor	Maximum Marks
1	General Construction & Similar Project Experience	**40**
2	Financial Soundness	**30**
3	Key Personnel	**20**
4	Construction Equipment	**5**
5	Methodology, Construction Schedule & Organization	**5**
	TOTAL	**100**

1. GENERAL CONSTRUCTION & SIMILAR PROJECT EXPERIENCE — 40 MARKS

1.1 General Construction Experience — 5 Marks

The bidder must have a minimum of five years' construction experience. Marks above the minimum shall be awarded as follows:

Construction Experience	Marks
Less than 05 years	0
05 years to less than 07 years	2
07 years to less than 10 years	3
10 years to less than 15 years	4
15 years or above	5

1.2 Completed Similar Building Projects — 25 Marks

Definition of Similar Project

For this procurement, a Similar Project shall mean construction of an RCC-framed building of comparable size and complexity involving substantial combinations of:

- Civil and RCC structural works;
- Architectural works and high-quality finishing;
- Electrical installations;
- Plumbing and sanitary installations;
- Water supply and drainage work; and
- Associated external/development works.

A Mosque / Jamia Mosque project shall be considered the most directly relevant experience.

Other institutional/public/community buildings, such as educational buildings, hospitals, public buildings, community centres and comparable purpose-built facilities, may also qualify as similar projects where their scope, construction methodology, value and complexity are comparable.

The attached criteria already define similar experience on the basis of RCC building construction.

Minimum Eligibility

A bidder must have at least:

02 completed each having a value of at least PKR 75 Million.

Marks for Number of Similar Projects

Qualifying Similar Experience	Marks
Less than 02 qualifying projects	0
02 qualifying projects	15
03 qualifying projects	20
04 or more qualifying projects	25

1.3 Specific Mosque Construction Experience — 5 Marks

Mosque / Jamia Mosque Experience	Marks
No qualifying Mosque project	0
01 qualifying Mosque project completed/substantially completed	3
02 or more qualifying Mosque projects completed/substantially completed	5

1.4 Ongoing Projects — 5 Marks

No of Projects	Marks
No Projects	0
One Project	3
Two Projects	4
Three Projects	5

For completed projects, completion / performance certificates and for ongoing projects, work orders must be attached along with proof through photographs.

2. FINANCIAL SOUNDNESS— 30 MARKS

The basic minimum financial requirements shall remain mandatory. A bidder not meeting PKR 150 million average annual turnover, PKR 40 million immediate financial resources, shall be disqualified irrespective of total marks.

2.1 Average Annual Construction Turnover — 15 Marks

Average turnover shall be calculated from certified construction turnover during the last three completed financial years.

Average Annual Construction Turnover	Marks

Less than PKR 150 Million	0
PKR 150 Million to < 200 Million	8
PKR 200 Million to < 250 Million	10
PKR 250 Million to < 300 Million	12
PKR 300 Million and above	15

2.2 Bank Credit Line — 15 Marks

Bank Credit Line	Marks
Less than PKR 40 Million	0
PKR 40 Million to < 50 Million	5
PKR 50 Million to < 60 Million	7
PKR 60 Million to < 70 Million	10
PKR 70 Million to < 80 Million	12
PKR 80 Million and above	15

Where a line of credit is relied upon, it shall be certified by the concerned scheduled bank and shall identify the amount available for the tendered project. The attached draft currently establishes PKR 40 million as the minimum immediate financial-resource threshold.

3. KEY PERSONNEL — 20 MARKS

Position	Minimum Requirement	Marks
01 Project Manager / Construction Manager	B.Sc./B.E. Civil, PEC Registered, 10 years similar experience	5
02 Site / Civil Engineer	B.Sc./B.E. Civil, PEC Registered, 5 years similar experience	4
01 Electrical Engineer	B.Sc./B.E. Electrical, PEC Registered, 5 years similar experience	2
01 Mechanical / PHE Engineer	Relevant Engineering Degree, 5 years similar experience	2
01 Quantity Surveyor	Relevant Degree/B.Tech/DAE, 5 years similar experience	2
01 QA/QC Engineer	B.Sc./B.E. Civil, 5 years total and 3 years similar experience	3
01 HSE / Safety Officer	Relevant qualification/certification, 5 years similar experience	2
Total		**20**

For each position:

- Full marks shall be awarded where the proposed person meets or exceeds the specified minimum qualification and experience.
- **50% of the allocated marks** may be awarded where qualification is acceptable but similar/relevant experience is marginally below the stated preferred experience, provided the mandatory professional/legal requirement is satisfied.
- **Zero marks** shall be awarded if the proposed person does not meet the essential qualification/registration requirement or documentary evidence is not submitted.

4. CRITICAL CONSTRUCTION EQUIPMENT — 5 MARKS

Availability of equipment shall be assessed from Appendix-G.

Suggested critical equipment for these Mosque works:

Critical Equipment / Facility	Marks

Concrete mixer / batching arrangement and concrete vibrators	1
Steel cutting and bending equipment	1
Scaffolding / shuttering / formwork system	1
Survey equipment including Total Station / Auto Level	1
Material lifting / handling equipment and site testing arrangement	1
Total	5

Owned equipment: Full marks.
Leased/hired equipment with valid commitment: Half (0.5) Marks

5. METHODOLOGY, CONSTRUCTION SCHEDULE AND ORGANIZATION — 5 MARKS

Sub-Criterion	Maximum Marks
Construction Methodology appropriate to Mosque works	2
Detailed Construction Schedule / Work Programme within contractual completion period	2
Organization Chart, deployment and site-management arrangement	1
Total	**5**

The methodology should specifically address key activities such as RCC works, masonry, architectural finishes, Mosque-specific finishes/features, MEP installations, ablution/toilet areas, waterproofing, external works, testing, quality assurance and completion/handing over.

TECHNICAL QUALIFICATION RULE

A Bidder shall be declared Technically Qualified only when:

(a) it satisfies all Mandatory Eligibility and Responsiveness Requirements on Pass/Fail basis; and
(b) it obtains a minimum overall technical score of 70 marks out of 100.

A bidder obtaining **less than 70 marks** shall be declared technically non-qualified, and its Financial Bid shall remain unopened/shall be returned in accordance with the applicable procurement procedure.

There should be no relaxation of a mandatory Pass/Fail requirement merely because a bidder obtains 70 or more technical marks.

FINANCIAL EVALUATION AND AWARD

The Financial Bids only of technically qualified and substantially responsive bidders securing at least 70% marks shall be opened.

The Financial Bids shall then be examined, corrected and evaluated in accordance with the Bidding Documents. The Contract shall be awarded to the technically qualified and substantially responsive bidder offering the Lowest Evaluated Bid Price, subject to fulfillment of all other requirements of the Bidding Documents.

Appendix-N to Bid

MEMORANDUM OF WORK

(To be filled in by the PGSHF)

(a) General Description: **Construction of Jamia Mosque at Punjab Government Servants Housing Foundation Scheme, Adiala Road, Rawalpindi**
(If several sub works are included, they should be detailed in a separate sheet)

(b) Estimate cost: **150,600,762/-**

(c) Amount of earnest money to accompany the tender **5% of Estimated Cost** (to be furnished by the tenderer as explained above)

(d) Percentage of security deposit to be retained from the bill.
(i) On the amount of work done up to Rs. 5 million = Ten (10) percent.

(ii) On the amount of work done beyond Rs. 5 million = Five (5) percent

(e) Minimum amount of interim running bills **Rs. 16,733,418/-**

(f) Mobilization period **Fifteen (15) days**.

(g) Time allowed to complete the work after the expiry of mobilization period **Nine (09) month**.

(h) Amount of performance security Rs._____ 10% of bid price.

(i) The Period of Maintenance

After the date of issuance of certificate of completion, Twelve (12) Months.

Authorized Signature and Official
Seal of the Contractor

Name: _____

Date:_____

FORMS

BID SECURITY
PERFORMANCE SECURITY
CONTRACT AGREEMENT
MOBILIZATION ADVANCE GUARANTEE/BOND
AND
INDEMNITY BOND FOR SECURED ADVANCE

BID SECURITY

(NOT APPLICABLE)

Security Executed on _____
(Date)

Name of Surety (Bank) with Address: _____
(Scheduled Bank in Pakistan)

Name of Principal (Bidder) with Address _____

_____

Penal Sum of Security Rupees . _____(Rs. _____)

Bid Reference No. _____

KNOW ALL MEN BY THESE PRESENTS, that in pursuance of the terms of the Bid and at the request of the said Principal (Bidder) we, the Surety above named, are held and firmly bound unto _____
(hereinafter called the 'Employer') in the sum stated above for the payment of which sum well and truly to be made, we bind ourselves, our heirs, executors, administrators and successors, jointly and severally, firmly by these presents.

THE CONDITION OF THIS OBLIGATION IS SUCH, that whereas the Bidder has submitted the accompanying Bid dated _____ for Bid No. _____ for_____(Particulars of Bid) to the said Employer; and

WHEREAS, the Employer has required as a condition for considering said Bid that the Bidder furnishes a Bid Security in the above said sum from a Scheduled Bank in Pakistan or from a foreign bank duly counter-guaranteed by a Scheduled Bank in Pakistan, to the Employer, conditioned as under:

(1) that the Bid Security shall remain in force up to and including the date 30 days after the deadline for validity of bids as stated in the Instructions to Bidders or as it may be extended by the Employer, notice of which extension(s) to the Surety is hereby waived;

(2) that the Bid Security of unsuccessful Bidders will be returned by the Employer after expiry of its validity or upon signing of the Contract Agreement; and

(3) that in the event of failure of the successful Bidder to execute the proposed Contract Agreement for such work and furnish the required Performance Security, the entire said sum be paid immediately to the said Employer pursuant to Clause 15.6 of the Instruction to Bidders for the successful Bidder's failure to perform.

NOW THEREFORE, if the successful Bidder shall, within the period specified therefore, on the prescribed form presented to him for signature enter into a formal Contract with the said Employer in accordance with his Bid as accepted and furnish within fifteen (15) days of his being requested to do so, a Performance Security with good and sufficient surety, as may be required, upon the form prescribed by the said Employer for the faithful performance and proper fulfilment of the said Contract or in the event of non-withdrawal of the said Bid

within the time specified for its validity then this obligation shall be void and of no effect, but otherwise to remain in full force and effect.

PROVIDED THAT the Surety shall forthwith pay the Employer, the said sum upon first written demand of the Employer (without cavil or argument) and without requiring the Employer to prove or to show grounds or reasons for such demand, notice of which shall be sent by the Employer by registered post duly addressed to the Surety at its address given above.

PROVIDED ALSO THAT the Employer shall be the sole and final judge for deciding whether the Principal (Bidder) has duly performed his obligations to sign the Contract Agreement and to furnish the requisite Performance Security within the time stated above, or has defaulted in fulfilling said requirements and the Surety shall pay without objection the said sum upon demand from the Employer forthwith and without any reference to the Principal (Bidder) or any other person.

IN WITNESS WHEREOF, the above bounden Surety has executed the instrument under its seal on the date indicated above, the name and seal of the Surety being hereto affixed and these presents duly signed by its undersigned representative pursuant to authority of its governing body.

SURETY (Bank)

WITNESS:

Signature _____

1. _____

Name _____

_____

Title _____

Corporate Secretary (Seal)

Corporate Guarantor (Seal)

2. _____

_____

Name, Title & Address

FORM OF PERFORMANCE SECURITY

(Bank Guarantee)

Guarantee No._____
Executed on _____
Expiry date
_____

[Letter by the Guarantor to the Employer]

Name of Guarantor (Bank) with address:_____
(Scheduled Bank in Pakistan)
Name of Principal (Contractor) with address:_____
_____
Penal Sum of Security (express in words and figures)_____
_____
Letter of Acceptance No. _____Dated _____

KNOW ALL MEN BY THESE PRESENTS, that in pursuance of the terms of the Bidding Documents and above said Letter of Acceptance (hereinafter called the Documents) and at the request of the said Principal we, the Guarantor above named, are held and firmly bound unto the _____ (hereinafter called the Employer) in the penal sum of the amount stated above for the payment of which sum well and truly to be made to the said Employer, we bind ourselves, our heirs, executors, administrators and successors, jointly and severally, firmly by these presents.

THE CONDITION OF THIS OBLIGATION IS SUCH, that whereas the Principal has accepted the Employer's above said Letter of Acceptance for _____ _____ (Name of Contract) for the _____ _____ (Name of Project).

NOW THEREFORE, if the Principal (Contractor) shall well and truly perform and fulfill all the undertakings, covenants, terms and conditions of the said Documents during the original terms of the said Documents and any extensions thereof that may be granted by the Employer, with or without notice to the Guarantor, which notice is, hereby, waived and shall also well and truly perform and fulfill all the undertakings, covenants terms and conditions of the Contract and of any and all modifications of said Documents that may hereafter be made, notice of which modifications to the Guarantor being hereby waived, then, this obligation to be void; otherwise to remain in full force and virtue till all requirements of Clause 49, Defects Liability, of Conditions of Contract are fulfilled.

Our total liability under this Guarantee is limited to the sum stated above and it is a condition of any liability attaching to us under this Guarantee that the claim for payment in writing shall be received by us within the validity period of this Guarantee, failing which we shall be discharged of our liability, if any, under this Guarantee.

We, _____ (the Guarantor), waiving all objections and defences under the Contract, do hereby irrevocably and independently guarantee to pay to the Employer without delay upon the Employer's first written demand without cavil or arguments and without requiring the Employer to prove or to show grounds or reasons for such demand any sum or sums up to the amount stated above, against the Employer's written declaration that the Principal has refused or failed to perform the obligations under the Contract which payment will be effected by the Guarantor to Employer's designated Bank & Account Number.

PROVIDED ALSO THAT the Employer shall be the sole and final judge for deciding whether the Principal (Contractor) has duly performed his obligations under the Contract or has defaulted in fulfilling said obligations and the Guarantor shall pay without objection any sum or sums up to the amount stated above upon first written demand from the Employer forthwith and without any reference to the Principal or any other person.

IN WITNESS WHEREOF, the above-bounden Guarantor has executed this Instrument under its seal on the date indicated above, the name and corporate seal of the Guarantor being hereto affixed and these presents duly signed by its undersigned representative, pursuant to authority of its governing body.

_____
Guarantor (Bank)

Witness:

1. _____ Signature _____

_____ Name _____
Corporate Secretary (Seal)

Title _____

2. _____

_____ _____
Name, Title & Address Corporate Guarantor (Seal)

FORM OF CONTRACT AGREEMENT

THIS CONTRACT AGREEMENT (hereinafter called the "Agreement") made on the _____ day of_____(month) 20_____ between _____ (hereafter called the "Employer") of the one part and _____ (hereafter called the "Contractor") of the other part.

WHEREAS the Employer is desirous that certain Works, viz _____ should be executed by the Contractor and has accepted a Bid by the Contractor for the execution and completion of such Works and the remedying of any defects therein.

NOW this Agreement witnesseth as follows:

1. In this Agreement, words and expressions shall have the same meanings as are respectively assigned to them in the Conditions of Contract hereinafter referred to.

2. The following documents after incorporating addenda / Clarification as agreed or otherwise, if any, except those parts relating to Instructions to Bidders shall be deemed to form and be read and construed as part of this Contract, viz:

   (a) The Contract Agreement;
   (b) The Letter of Acceptance;
   (c) The completed Form of Bid (Technical & Financial);
   (d) Special Stipulations (Appendix-A to Bid);
   (e) The Special Conditions of Contract – Part II;
   (f) The General Conditions – Part I;
   (g) The Drawings;
   (h) The priced Bill of Quantities (Appendix-D to Bid);
   (i) The completed Appendices to Bid (B, C, E to O);
   (j) The Specifications.
   (k) _____ (any other)

3. In consideration of the payments to be made by the Employer to the Contractor as hereinafter mentioned, the Contractor hereby covenants with the Employer to execute and complete the Works and remedy defects therein in conformity and in all respects with the provisions of the Contract.

3. The Employer hereby covenants to pay the Contractor, in consideration of the execution and completion of the Works as per provisions of the Contract, the Contract Price or such other sum as may become payable under the provisions of the Contract at the times and in the manner prescribed by the Contract.

4. All disputes or differences between the parties in connection with or arising out of this agreement shall be settled in accordance with the provisions of relevant clause of the conditions of contract.

IN WITNESS WHEREOF the parties hereto have caused this Agreement to be executed on the day, month and year first before written in accordance with their respective laws.

Signature of the Contactor	Signature of Employer
_____	_____
(Seal)	(Seal)

Signed, Sealed and Delivered in the presence of:

Witness:	Witness:
_____	_____
(Name, Title and Address)	(Name, Title and Address)

MG-1

MOBILIZATION ADVANCE GUARANTEE

(Unconditional Bank Guarantee)

Guarantee No._____ Date _____

WHEREAS _____(hereinafter called the 'Employer') has entered into a Contract for _____
(Particulars of Contract)
with _____ (hereinafter called the "Contractor').

AND WHEREAS, the Employer has agreed to advance to the Contractor, at the Contractor's request, an amount of Rupees _____ (Rs _____) which amount shall be advanced to the Contractor as per provisions of the Contract.

AND WHEREAS, the Employer has asked the Contractor to furnish Guarantee to secure the mobilization advance for the performance of his obligations under the said Contract.

AND WHEREAS, _____
(Scheduled Bank in Pakistan acceptable to the Employer)
(hereinafter called the "Guarantor") at the request of the Contractor and in consideration of the Employer agreeing to make the above advance to the Contractor, has agreed to furnish the said Guarantee.

NOW, THEREFORE, the Guarantor hereby guarantees that the Contractor shall use the advance for the purpose of above mentioned Contract and if he fails and commits default in fulfilment of any of his obligations for which the advance payment is made, the Guarantor shall be liable to the Employer for payment not exceeding the aforementioned amount.

Notice in writing of any default, of which the Employer shall be the sole and final judge, on the part of the Contractor, shall be given by the Employer to the Guarantor, and on such first written demand, payment shall be made by the Guarantor of all sums then due under this Guarantee without any reference to the Contractor and without any objection.

This Guarantee shall remain in force until the advance is fully adjusted against payments from the Interim Payment Certificates of the Contractor or until _____whichever is earlier.
(Date)
The Guarantor's liability under this Guarantee shall not in any case exceed the sum of Rupees _____(Rs _____).

This Guarantee shall remain valid up to the aforesaid date and shall be null and void after the aforesaid date or earlier if the advance made to the Contractor is fully adjusted against payments from Interim Payment Certificates of the Contractor provided that the Guarantor agrees that the aforesaid period of validity shall be deemed to be extended if on the above mentioned date the advance payment is not fully adjusted.

GUARANTOR

1. Signature _____
2. Name _____
3. Title _____

WITNESS

1. _____
   _____
   Corporate Secretary (Seal)

2. _____ _____
   (Name Title & Address) Corporate Guarantor(Seal)

INDEMNITY BOND FOR SECURED ADVANCE

AGAINST MATERIALS BROUGHT AT SITE

(NOT APPLICABLE)

(ON RS. 300 NON-JUDICIAL STAMP PAPER)

This Deed of Indemnity is issued by M/s. _____ _____ *(Name* of *the Contractor)* in favour of *M/s.*_____ *(Name* of *the Employer).*

Whereas_____ (hereinafter called the Employer) has paid the Secured Advance against the cost of material through any Bank or like agency by any other method by virtue of the terms of the contract existing between the parties. The details of the material and their price for which secured advance is being sought for the period _____till consumption of the material is as under:-

1. _____ at Rs._____ per _____ = Rs.
2. _____ at Rs._____ per _____ = Rs.
3. _____ at Rs._____ per _____ = Rs.
4. _____ at Rs._____ per _____ = Rs.

THEREFORE THIS DEED OF INDEMNITY WITHNESSETH AS FOLLOWS:

I/We _____of M/s. _____ do hereby indemnify M/s _____for all losses due to thefts, arson, pilferage, loss due to flood and inundation, shortage, deterioration and depreciation etc. through any act of Man or God or slump in the Market of any or all the materials financed or paid by the Employer on our request for financing payment against material.

I/We_____ shall indemnify _____ against any or all claims, action damages arising out of or resulting to the said material.

I/We _____further declare that we will faithfully abide by the above declaration and solemnly affirm that we will not remove, sell, pilferage any of the materials against which M/s _____ has paid us such a secured advance and will not pledge the same with any Bank, Finance Corporation, Firm, Company, Individual or the like agency or create any change whereon in any from what so ever.

I/We_____do hereby also declare that in the event of my/our infringement of the declaration made above _____ will be entitled to forfeit all such material and also proceed against me/us according to the relevant clause pertaining to breach of contract and further invoke the power or seek any remedies secured of _____ under the contract Agreement signed with us or otherwise available under law.

Place_____ Dated _____

Contractor _____

CONDITIONS OF CONTRACT

FOR WORKS OF CIVIL

ENGINEERING CONSTRUCTION

PART I GENERAL CONDITIONS

WITH FORMS OF TENDER AND AGREEMENT

Table of Contents

PART I - GENERAL CONDITIONS

Definitions and Interpretation····75

CONTRACT DOCUMENTS

Clause 4: Documents mutually explanatory····78

Clause 5: Custody of drawings····78

Classified drawings····78

One copy of drawing to be kept on site.····78

Further Drawings and instructions····79

GENERAL OBLIGATION

Clause 6: Contract Agreement····79

Clause 7: Performance Security····79

Action when Program, nor submitted in time····80

Clause 9: Setting Out····80

Clause 10: Work to be executed in accordance with the specifications, drawings, orders, etc.····81

Clause 11: Action where no specifications are provided····81

Clause 12: Work to be under direction of engineer-in-charge····81

Clause 13: Lighting at night work····81

Watching & Lighting····82

Clause 14: Arrangements to safeguard danger to unfinished work····82

Clause 15: Contractor to supply plant, ladders, scaffolding. etc.····82

Contractor liable to pay damages arising from non-provision of lights, fencing etc.,····82

Clause 16: Notice to be given before the work is covered up····83

Clause 17: Contractor's employees····83

Removal of contractor's employees.····83

Clause 18: Whole time qualified technical personnel for supervision of work····84

Clause 19: Opportunities for other contractor····84

Clause 20: Damage to persons and property.····84

Indemnity by the Government····85

Clause 21: Work to be open to inspection Contractor or his responsible agent to be present····· 86
Clause 22: Giving of notices and payment of fees····· 86
Compliance with status regulations\ etc.·····86
Payment of income tax and other taxes.····· 86
Clause 23: Cost of bonds····· 87
Clause 24: Change in the constitution of firm·····87
Clause 25: Photographs and advertisements.....87
ASSIGNMENT AND SUB-LETTING
Clause 26: Assignment.....87
Clause 27: Subletting..... 87
MATERIAL AND WORKMANSHIP
Clause 28: Quantity of materials undo workmanship and tests..... 88
Cost of samples.....88
Cost of tests..... 88
Clause 29: Constructional material fittings etc., to conform to representative samples approved by the Project Director.....89
Clause 30: Stores to be supplied by PGSHF..... 89
Clause 31: Action and compensation payable in case of bad work..... 90
LABOUR
Clause 32: Application of labour laws and rules.....90
Clause 33: Contractor liable for payment of compensation to injured workman, or in case of death to his relations.....90
Clause 34: Use of donkeys and other animals.....91
COMMENCEMENT, TIME AND DELAYS
Clause 35: Commencement of work..... 91
Clause 36: Time for completion.....91
Clause 37: Extension of time for completion..... 91
Clause 38: No work at night or on Fridays/ Public holidays..... 92
Clause 39: Compensation of delay..... 92
Compensation for inadequate funding..... 93
CERTIFICATE OF COMPLETION
Clause 40: Certification of completion of work.....93
ALTERATIONS, ADDITIONS AND OMISSIONS
Clause 41: Alteration in specification and drawing..... 94
Alterations, omissions or substitutions do not invalidate the contract.....95
Extension of time in consequence of alterations.....95

Rate of works not in bid schedule or in the estimates..... 95

Clause 42: No compensation for alteration in or restriction of work to be carried out, If variation does not exceed 20%..... 96

Variation exceeding 20%..... 96

MAINTENANCE AND DEFECTS

Clause 43: Execution of work of Repair, etc.,..... 97

Cost of execution of works of repair, etc..... 97

Remedy of contractor's failure to carry out work required..... 98

Clause 44: Contractor liable to male good damages and for any imperfection noticed during period of maintenance..... 98

ADVANCES TO CONTRACTORS

Clause 45: Secured advance on materials brought to site..... 98

PAYMENTS

Clause 46: Bills to be on prescribed form..... 99

Clause 47: Bills to be Submitted monthly..... 99

Clause 47-A Payments of items with imbalance rates..... 99

Clause 48: Deduction of security deposit..... 100

Clause 49: Conversion of security deposit into profit bearing securities..... 100

Clause 50: Refund of security deposits..... 101

Clause 51: Payment on Intermediate Certificate to be Regarded as Advances..... 101

Clause 52: Final bill to be submitted within one month..... 102

Clause 53: Procedure for payment to firms..... 102

Clause 54: Sums payable by way of compensation to the considered as reasonable compensation without reference to actual loss..... 102

VARIATION IN PRICES OF SPECIFIED MATERIAIS

Clause 55: Variation in Prices..... 103

CLAIMS OF CONTRACTOR

Clause 56: Bills to be submitted monthly..... 105

Clause 57: Claims for payment of extraordinary nature..... 106

Clause 58: Time Limit for unforeseen claims..... 106

Clause 59: Claim for compensation for delay in the execution of the work..... 106

REMEDIES AND POWERS

Clause 60: Action when whole of security deposit is forfeited..... 106

Clause 61: Work at the risk and expense of the contractor..... 107

Clause 62: Contractor..... 109

Remains liable to pay compensation if action not taken under clauses..... 109

Powers to take possession of or require removal or sell contractor's plant etc..... 109

Clause 63: Contract may be rescinded and security forfeited for subletting bribing or if contractor becomes insolvent..... 109

Clause 64: Deduction of amount due to Govt. on any account whatsoever to be permissible from sums payable to contractor..... 110

SETTLEMENT OF DISPUTES

Clause 65: Procedure in disagreement..... 111

Contractor dissatisfied with the decision of the Project Director..... 111

Increase in amount of claim once preferred not allowed..... 111

Dispute for arbitration limited..... 112

Arbitration..... 112

Schedule of Material to be supplied by PGSHF

Schedule of Equipment to be supplied by PGSHF

Name of Manufacturer of Specified Materials for base rate

PART I - GENERAL CONDITIONS

Definitions and Interpretation

In the contract (as herein after defined) the following words and expressions shall have the meanings hereby assigned to them, except where the context otherwise requires:

1) *"Agent"* means the person appointed by the contractor to act on his behalf in his absence;
2) *"Bill of Quantities"* means the priced and completed bill of quantities forming part of the Tender.
3) *"Certificate of completion"* means the certificate of completion given by the Engineer-in-charge pursuant to clause 40 of these conditions;
4) *"Contract"* means the contract agreement, the documents set out therein and includes the conditions of contract, the tender and acceptance thereof, the specifications, the drawings, the bid schedule, schedule of rates ad the prices;
5) *"Contractor"* means the person or persons, firm or company whose tender has been accepted by the Engineer-in-charge, and shall include the contractor's duly authorized representative, successors and assigns;
6) *"Contract price"* means the sum named in the tender, subject to such addition thereto or deductions there from as may be made under the provisions of the contract;
7) *"Constructional Plant"* means all appliances, or things required in or about the execution, completion, or maintenance of the woks or temporary works, but does not include the materials or other things intended to form or forming part of permanent or temporary works;
8) *"Commencement Date"* means the date upon which the Contractor receives the notice to commence issued by the Engineer pursuant to Clause 35.
9) *"Drawings"* means the drawing(s) referred to in the contract documents and any modifications of such drawing(s).as may from time to time be furnished by the by the Project Director;
10) *"Engineer-in-Charge"* means the Project Director or the duly approved by the MD,

PGSHF who for the time being and from time to time is in charge of the works. As Project Engineer for the purposes of implementation of the project.

11) *"Engineer's Representative"* means a person appointed from time to time by the Engineer under Sub-Clause 2.2.

12) *"Final Payment Certificate"* means the certificate of payment issued by the Engineer in charge.

13) *"Government" means* the Government of the Punjab.

14) *"Item rates"* mean the rates determined on the basis of the market rates system introduced' by the Government in replacement of the Composite Schedule of rates 1998 through Finance Department Notification .No. RO (Tech) F.D.-2-3/2004 dated 02.08.2004 (Annexure-A)" as applicable at the time of award of tenders.

15) *"Interim Payment Certificate"* means any certificate of payment issued by the Engineer other than the Final Payment Certificate.

16) *"Subcontractor"* means any person named in the Contract as a Subcontractor for a part of the Works or any person to whom a part of the Works has been subcontracted with the consent of the Engineer and the legal successors in title to such person, but not any assignee of any such person.

17) *"Maintenance"* means the repairs, amendment, reconstruction and includes the rectification of defects imperfections, shrinkages and other faults except fair wear and tear as may be required of the contractor in writing by the Engineer-in-charge during the period of maintenance;

18) *"Programme of work"* means the Programme of work submitted by the contractor and approved by the Engineer-in-charge and includes an amendment thereto made from time to time and approved by the Engineer-in-charge;

19) *"Retention Money"* means the aggregate of all monies retained by the Employer.

20) "*Site"* means the lands and other places on, at, over, under; in or through which the works are to be executed or carried out in pursuance of the contract or any adjacent land, or part or street, which may be allotted or used for the purpose of carrying out the contract or any lands or places provided by the Engineer-in-charge for the purpose of the contract together with such other places as may be specifically designated in or pursuant to the contract as forming part of the site;

21) *"Specifications"* means the specification referred to in the tender and any modification thereof or addition thereto as may from time to time be furnished or approved in writing by the Engineer-in-charge

22) *"Temporary works"* means all temporary works of every kind required in or about the construction, completion or maintenance of the works;

23) *"Time for Completion"* means the time for completing the execution of and passing the Tests on Completion of the Works or any Section or part thereof as stated in the Contract (or as extended under Clause 36) calculated from the Commencement Date.

24) *"Tests on Completion"* means the tests specified in the Contract or otherwise agreed by the Engineer and the Contractor which are to be made by the Contractor before the Works of any Section or part thereof are taken over by the Employer.

25) *"Taking-Over Certificate"* means a certificate issued pursuant to Clause 40.

26) *"Works"* means the works to be executed in accordance with the contract and includes any permanent works as required for the performance of the contract.

CONTRACT DOCUMENTS

Clause 4: Documents mutually explanatory

Except if and to the extent otherwise provided by the contract, the conditions of contract and additional conditions annexed hereto shall prevail over those of any other document forming part of the contract. Subject to the foregoing, the several documents forming the contract are to be taken as mutually explanatory of one another; but in case of any error, omission, ambiguity or discrepancy is found between these documents, the same shall be reported to the Project Director, who shall correct such error or omission or explain and adjust the ambiguity or discrepancy, as the case may be and shall thereupon issue to the contractor instructions directing in what manner the work is to be carried out. Provided always that if in the opinion of the engineer-in-charge comp1iace with any such Instructions shall involve the contractor in any expenses which by reason or any such error, omission, ambiguity or discrepancy, the contractor did not have reasons to anticipate, the Project Director shall pay such additional sums as he shall certify to be reasonable to cover such expenses. Provided further that any work done by the contractor, which perpetuates or adds to any error, omission, ambiguity or discrepancy, already discovered and pointed out, shall be considered to have been done at the contractor's own risk.

Clause 5: Custody of drawings

(1) The drawings shall remain in the sole, custody of the designated PMU Engineering Wing, two sets of the detailed or working drawings duly signed by the PD will be obtained by the contractor free of cost from the Project Director after acceptance of his tender. The' contractor shall provide and make at his own expense any further copies required by him. On the completion of the contract, the contractor shall return to the PMU all drawings provided to him under the contract.

Classified drawings

(2) If so instructed, the contractor shall undertake not to disclose details of classified drawings, other than to men in his employ, and will give an undertaking to the Project Director that these drawings are not replicated or passed on to others or used by any other agency / person.

One copy of drawing to be kept on site.

(3) Copy of the drawings furnished to the contractor as aforesaid shall be kept by the contractor at site and the same shall at all reasonable times also be made available for inspection and used by the engineer-in-charge or by any of his superior officer, or by any other person authorized by the Project Director in writing.

Further Drawings and instructions

(4) The PMU shall supply to the contractor, from time 1'0 time, during the progress of the works, such further drawings and instructions as shall be necessary for the purpose of the proper and adequate execution and maintenance of the works and the contractor shall carry out and be bound by the same. The contractor shall give adequate notice in writing, to the PD of any such further drawing and instructions that the contractor may require for execution of works or otherwise under the contract.

GENERAL OBLIGATION

Clause 6: Contract Agreement

The contractor shall, when called upon so to do by the Project Director enter into and execute a contract agreement in the form annexed.

Clause 7: Performance Security

In every case where performance has been provided, as specified in item (h) of Memorandum of Work, contractor shall furnish/maintain the performance security for the extended period of completion under Clause Clause-37 of the agreement. All compensations or the sums of money payable by the contractor under the terms of this contract may be deducted from or paid by the sale of sufficient part of his performance security, and in the event of his performance security reduced by reason of any such deduction or sale as aforesaid the contractor shall within ten days thereafter make good in cash or other securities as aforesaid any sum or sum which may have been deducted from, or raised by dale of performance security or any part thereof.

The performance security deposit /additional performance security deposit lodged by a contractor (in cash or/other form) shall be refunded to him after the expiry of three months after the issue of certificate of completion of the work under Clause 40 hereof by the Engineer-in-charge, or along with the final bill if it is prepared after that period on account of some unavoidable circumstances.

Clause 8: Program of work to be furnished if so, required by Engineer-

(1) The contractor shall, if so, required by the Project Director, submit in writing within the period specified by him for the approval a program in PERT showing the order of procedure and the method in which he proposes to carry out the works. The time and progress chart shall be prepared in direct relation to the time period stated in item (g) of the memorandum of work for the completion of

in-Charge

individual items thereof and the works as a whole. It shall indicate the forecast of the dates for commencement and completion of various trade process or section at the works and shall be amended may be required by agreement between the Project Director and the contractor within the limitation of time imposed in the contract documents.

(2) The contractor shall also, whenever required by the Project Director, furnish for his information full particulars in writing of the organization and staff by which he proposes to direct and administer his performance of the contract and also such further information concerning the contractor's arrangements for the carrying out of the work and of the constructional plants or temporary works which the contractor intends to supply, use or construct, as the case may be.

(3) The submission to and approval by the Project Director of such program, or the furnishing of such particulars or information shall not relieve the contractor of any of his duties or responsibilities under the contract.

Action when Program, nor submitted in time

(4) In the event of the non-submission of the program or revised/amended program of work by the contractor for approval by the Project Director within the period specified, the contractor shall be liable to pay as compensation an amount equal to 1/4% per day or such smaller, amount as the Project Director (whose decision in writing shall be final) may decide on the total tendered amount of the work, subject to a maximum of 2% of contract amount.

Clause 9: Setting Out

The contractor shall be responsible for the true and proper setting out of the works in relation to original points lines and levels of reference given by the Project Management Unit in writing, and for the correctness (subject as above mentioned) of the position, levels, dimensions and alignments of all parts of the works and for the provision of all necessary instruments, appliances and labor in connection therewith. If at any time during the progress of the work, any error shall appear or arise in the position, levels, dimensions, or alignment of any part of the works, the contractor on being required so to do, shall at his own expense, rectify such error to the satisfaction of PMU, unless such error is based on incorrect data, supplied in writing by the PMU Engineering Wing, in which case the expenses of

rectifying the Same shall be borne by the PGSHF. The checking of any setting out or of any line or levels by the PMU shall not in any way relieve the contractor of his responsibility for the correctness thereof, and the contractor shall be carefully protecting and preserve all points, makes, lines, levels, bench marks, site-rails, Pegs, slope-stakes, batten-boards, stakes for location, and other things used in setting out the works.

Clause 10: Work to be executed in accordance with the specifications, drawings, orders, etc.

The contractor shall execute the whole and every part of the work in the most substantial and workman like manner and both as regards material and otherwise in every respect in strict accordance with the specifications. The work executed by the contractor shall also conform to the design(s) and or drawings and. instructions in writing relating to the work signed by the PMU and lodged in his office, and to which the contractor shall be entitled to have access at such office, or on the site of the work for the purpose of inspection during office hours. The contractor shall, if so required, be entitled at his own expenses to make or cause to be made copies of specifications, and of all such designs, drawings and instructions as aforesaid.

Clause 11: Action where no specifications are provided

In the case of any class of work for which there is no such specification as is mentioned is para 2 of the general directions for the guidance of the tendered annexed hereto, such work shall be carried out in accordance with the prescribed standard specifications, and in the event of there being no such specifications in accordance with the specification, attached with the tender, if however, there is no standard specification or specifications attached with the tender, the work shall be carried out, is all respects in accordance with the instructions and requirements of Project Director.

Clause 12: Work to be under direction of engineer-in-charge

All works to be executed under the contract shall be executed under, the directions and subject to the approval in all respects, of the PMU Engineering Wing who shall be entitled to direct at what point or points and in what manner they are to be commenced and from time to time carried on.

Clause 13: Lighting at night work

(1) In the event of' night work being carried on, the contractor shall provide and maintain such good and sufficient lights as will enable the work to be proceed with satisfactorily and without danger. Similarly, the approach to the site and works where the night work is

being carried out shall be efficiently lighted. AII arrangements adopted for such lighting shall be to the satisfaction of the PMU.

Watching & Lighting

(2) The contractor shall in connection with the works provide and maintain at his own cost all lights, warning lights, caution boards attendants, guard fencing and watch men, when and where necessary or required by the Project Director, for the protection of the work or for the safety and convenience of the public or others.

Clause 14: Arrangements to safeguard danger to unfinished work

The contractor is expected to make himself acquainted with the weather conditions, etc., and make his arrangements in such a manner that unfinished work is not in danger from storms, floods, etc. A claim by the contractor for a loss caused by any such eventuality will not be entertained by the PGSHF.

Clause 15: Contractor to supply plant, ladders, scaffolding. etc.

The contractor shall supply at his own cost all materials (except such materials, if any, as may in accordance with the contract be supplied from the departmental store) constructional plants, tools, appliances, implements, ladders, cordage, tackles, scaffoldings and temporary works, requisite or proper for the. execution of the works, whether original, altered or substituted, and whether included in the specifications or other documents forming part of the contract referred to in these conditions or not, or which may be necessary for the purpose of satisfying or complying with the requirements of the PMU as any matter as to which under these conditions he is entitled to be satisfied, or which he is entitled to require together with carriage therefore, to and from the work. The contractor shall also supply without charge to requisite number of persons with the means and materials necessary for the purpose of setting out works, and counting, weighing, and assisting in measurement or examination at any time, and from time to time of the work or materials. Failing his so doing the same may be provided by the Project Director at the expense of the contractor, and the expenses may be deducted from any money due to the contractor under the contract, or from, his security deposit. The contractor shall also provide All necessary fencing and lights required to protect the public from accident, and shall be bound to bear the expenses of defense of every suit action or other proceedings at law that may be brought by any person for injuries sustained by him owing to neglect in taking the above precautions and to pay any damages and costs which may be awarded in any such suit,

contractor liable to pay damages arising from non-provision of lights, fencing etc.,

action or proceedings to any such person, or which may with the consent of the contractor be paid to compromise any claim by any such person.

Clause 16: Notice to be given before the work is covered up

The contractor shall give not less than five days' notice in writing to the PD or his subordinates in charge of the work, before covering up or otherwise placing beyond the reach of measurement any work in order that the same may be measurement, and correct dimensions thereof be taken before' the same is so covered up or placed beyond the reach of measurement and shall not cover up or place beyond the reach of measurement any work without the consent in writing of the PD or his subordinate in charge of the work. If any work is covered up or placed beyond the reach of measurement, without such notice having been given and consent obtained, the same shall be' uncovered at the contractor's expenses, and no payment or allowance shall be made for such work or the materials with which the same was executed.

Clause 17: Contractor's employees

(1) The contractor shall provide and employ on the site for the purpose of and in connection with the execution and maintenance of the work under the contact:-

(a) Only such engineering technical assistance as are skilled and experienced in their respective callings, and such sub-agents, foremen and leading hands as are competent to, give proper supervision of the work, they are required to supervise; and.

(b) Such skilled semi-skilled and unskilled labor as is necessary, for the proper and timely execution and maintenance of works under the contract.

Removal of contractor's employees.

(2) (i). The Project Director shall have full powers at all times to object to the employment and to require the contractor to remove forthwith from the site, the agent, workman, foreman or any other person employed by the contractor or any subcontractor, who in the opinion of the PD misconducts himself or is incompetent or negligent in the proper performance of his duties or whose employment is otherwise considered to be undesirable, and the contractor shall comply with the request forthwith.

(ii). No such agent, workman, foreman or other employees after his, removal from the work shall be re-employed or reinstated by the contractor for the purposes of and in connection with the contract at any time, except with the prior approve in writing of the Project Director.

Clause 18: Whole time qualified technical personnel for supervision of work

(a) The contractor shall employee for each contract, whole time qualified technical personnel for technical personnel for supervision of the work at the scale given below:

On contracts valuing: -

Upto Rs. 7.5 million ….one diploma engineer.

Exceeding Rs. 7.5 million …..one senior graduate engineer & one junior graduate engineer.

(b) If the contractor fails to employ the qualified technical personnel to the above scale, the Project Director shall, after giving the contractor 15 days' notice to this effect have the option to employ to make up the deficiency in the number of such persons at the risk and cost of the contractor.

Clause 19: Opportunities for other contractor

The contractor shall in accordance with the requirements of the PD afford all reasonable opportunities for carrying out the work by any other contractor(s) /specialist contractor(s) executing a part of the original work or ancillary to the work, employees/workmen of such contractor(s) or those of the PGSHF, who may be employed in execution of, or near the site of work not included in the contract. If, however, the contractor provides any material services/assistance or facilities to any such contractor or to the PGSHF on the written request of the Project Director, he shall be paid a reasonable sum as determined by the PD or paid according to provision in bid schedule if already made therein.

Clause 20: Damage to persons and property.

(1) The contractor shall indemnify and keep indemnified the PGSHF against all losses and claims for injuries or damage caused to any person or any property whatever, (other than surface or other damage to land or, crops being on the site suffered by the tenants or occupants) which may arise out of or in consequence of the construction and maintenance of the works and against all claims,

demands, proceedings, damages, costs, charges and expenses whatever in respect of or in relation thereto. Provided always that nothing herein contained shall be deemed to render the contractor liable for, or in respect of, or to indemnify the PGSHF against any compensation or damages for or with respect to:-

The permanent use or occupation of land by the works or any part thereof or (save as hereinafter provided) surface or other damage as aforesaid.

The right of the PGSHF to construct the works or any part thereof on, over, under, in or through any land.

Interference whether temporary or permanent with any right of light, air, way or water, or other assessment of quasi-easement which is the unavoidable result of the construction of the works in accordance with the contract.

Injuries or damage to persons or property resulting from any act or neglect done or committed during the currency of the contract of the PGSHF, its agents, servants or other contractors (not being employed by the contractor) or for or in respect of any claims, demands, proceedings, damages, costs, charges, and expenses in respect thereof or in relation thereto.

Provided further that for the purposes of the clause the expression "the site" shall be deemed to be limited to the area defined in the specification or shown on the drawings in which land and crops will be disturbed or damaged as an inevitable consequence of carrying out the works.

Indemnity by the Government

(2) The PGSHF will indemnify the Contractor for and against all claims, demands, proceedings, damages, costs, charges and expenses in respect of the matters referred to in the proviso to sub clause (1) of this clause up to a limit of Rs. 5 Million.

Note: The limit of various departments for the application of this clause is as follows:

1). Building	Contract exceeding Rs. 5 Million.
2). Public Health Engineering	Contract exceeding Rs. 5 Million.

3). Highway	Contract exceeding Rs. 10 Million.
4). Irrigation	The clause would not apply.
5). Housing & Physical Planning	Contract exceeding Rs. 5 Million.

The clause may be adopted in contracts of smaller amount wherever so directed by the Executive Director (Engg.) PGSHF

Clause 21: Work to be open to inspection Contractor or his responsible agent to be present

All works under or in the course of execution or executed in pursuance of the contract, shall at all-time be open to inspection

and supervision of the Project Director or his subordinate, and the contractor shall at all times during the usual working hours and at all other times for which reasonable notice of the intention of the Project Director, his senior or his subordinate to visit the works shall have been given to the contractor, either himself be present to receive orders and instructions or have an agent, duly accredited in, writing, present for that purpose. Orders given to the Contractor's agent shall be considered to have the same force as if they have, been given to the contractor himself.

Clause 22: Giving of notices and payment of fees

(1) The contractor shall give all notices, and at his own cost pay all fees, required to be given or paid by any national or state statute, ordinance or other laws or any regulation or bye-laws of any local or other duly constituted authority in relation to the execution Of the works or of any temporary works and by the rules and regulations of all public bodies and companies whose property or rights are affected or may be affected in any way by the works or any temporary works.

Compliance with status regulations\ etc.

(2) The Contractor shall conform in all respects with the provisions of any such federal, provincial and local statutes, ordinance or law as aforesaid and the regulations or by-laws of any local or the other duly constituted authority, which may be applicable to the works, or to any temporary works and with such rules and regulations of Public Bodies and companies as aforesaid and shall keep the PGSHF indemnified against all penalties and liabilities of every kind for branch of any such statutes, ordinance or law, regulation or by-laws.

Payment of income tax

(3) The contractor shall be responsible for the payment of all income

and other taxes.

tax, super tax and other government or local taxes arising out of the contract, which shall not be reimbursed to him by the PGSHF and, the rates and prices stated in the bid schedule shall be deemed to cover all such taxes.

Clause 23: Cost of bonds

The cost of various bonds to be entered into and executed between the contractor and the Project Director shall be in all respects, at the expense of the contractor.

Clause 24: Change in the constitution of firm

In the case of tender by partners, any change in the constitution of the firm, joint venture, company or corporation shall be forthwith notified by the contractor to the Project Director for his information.

Clause 25: Photographs and advertisements.

Photographs of the works shall be taken by permission of the Project Director. Only signs or other advertisement approved by the Project Director may be displayed at or near the works. Photographs of the works shall not be published without prior written approval of the PGSHF, which shall not be unreasonably withheld.

ASSIGNMENT AND SUB-LETTING

Clause 26: Assignment.

The contractor shall not assign the contract or any part thereof or any benefit or interest therein or there under without the prior written consent of the Project Director.

Clause 27: Subletting

The contractor shall not sublet the works or any part thereof except where otherwise provided by the contract, without the prior written consent of the, Project Director and such consent, if given shall not relieve the contractor from any liability or obligation under the contract and he shall be responsible for the acts, defaults and negligence of any sub-contractor, his agents, servants or workmen as if they were the acts, defaults or neglects of the contractor, his agents, servants or workmen. Provided always that the provision of labour as a piecework basis shall not be deemed to be a subletting under this clause.

MATERIAL AND WORKMANSHIP

Clause 28: Quantity of materials undo workmanship and tests

(1) All materials and workmanship shall be of the respective kinds described in the contract and in accordance with the instructions of the PD and shall be subjected from time to time to such tests as the PMU Engineering Wing may direct at the place of manufacture or fabrication or on the site or at all or any of such places. The contractor shall provide such assistance, instruments, machines, labour and materials as are normally required for examining, measuring and testing any work and the quality, weight or quantity of any material used and shall supply samples of materials before incorporation in the works for testing as may be selected and required by the PMU Engineering Wing.

Cost of samples

(2) All samples shall he supplied by the contractor at his own cost if the supply thereof is clearly intended by or provided for in the specifications or bill of quantities.

Cost of tests

(3) The cost of making any test shall be borne by the contractor if such test is clearly intended by or provided for in the specification or bill of quantities and in the cases only of a test under load or of a test to ascertain whether the design or any finished or partially finished work is appropriate for the purposes which it was intended to fulfill is particularized in the specification or bill of quantities in sufficient detail to enable the contractor to price or allow for the same in his tender.

(4) If any test is ordered by the PD which in either:

not so intended by or provided for; or

(in the cases above mentioned) is not so particularized; or

Through so intended or provided for, is ordered by the PD to be carried out by an independent person at any place other than the site or the place of manufacture or fabrication of the materials tested. Then the cost of such test shall be borne by the contractor if the test shows the workmanship or materials not to be in accordance with the provision of the contract or the instructions

of the PD.

Clause 29: Constructional material fittings etc., to conform to representative samples approved by the Project Director

Before any constructional material, fittings is brought to the site of work, the contractor shall submit to the PMU representative samples of the material fittings, etc., he proposes to use. The samples after approval will be retained by the PMU in his custody and the contractor shall be responsible for ensuring that materials and fittings, etc., conforming to such samples are used throughout the contract, failing which the material, fittings, etc., will not be accepted and shall be removed forthwith from the site of work if so desired.

Clause 30: Stores to be supplied by PGSHF.

If the specification, or the estimate of the work provides for the use of any special description of material and equipment to be supplied from the Project Director or if it is required that the contractor shall use certain stores to be provided by the Project Director (such materials, stores and equipment and the prices to be charged therefore as hereinafter mentioned being so far as practicable for the convenience of the contractor but not so as in any way to control the meanings or effect of this contract specified in the schedule of memorandum hereto annexed), the contractor shall be supplied with such materials and stores as required from time to time to be used by him for the purpose of the contract only; and the value of the full quantity of materials and stores so supplied at the rates specified in the said schedule or memorandum may be set off or deducted from any sums due or to become due, to the contractor, under the contract or otherwise or against or from the security deposit. All materials supplied to the contractor shall remain the absolute property of the PGSHF, and shall not, on any account be removed from the site of works without the written permission of the engineer-in-charge, and shall at all times be open to inspection of the Project Director. Any such material unused or in perfectly good condition at the time of the completion or termination of the contract, shall be returned to the Project Director store if by a notice in writing under his hand he shall so require; but the contractor shall not be entitled to return any such materials unless with such consent, and shall have no claim for compensation on account of any such materials so supplied to him, as aforesaid being unused by him, or for any wastage in or damage, to any such materials.

Clause 31: Action and compensation payable in case of bad work.

If it shall appear to the PD or to his subordinate in charge of the work, that any work has been executed with unsound, imperfect, or unskillful workmanship or that any materials or articles provided by him for the execution of the work are unsound, or of a quality inferior to that contracted for, or otherwise not in accordance with the contract the contractor shall on demand in writing from the PD specifying the work, materials or articles complained of notwithstanding that the same may have been inadvertently passed, certified and paid for, forthwith rectify, remove and reconstruct the work so specified in whole or in part, as the case may require, or as the case may be, remove the materials or articles so specified and provide materials as originally contracted or articles at his own proper charge and cost, and in the event of his failing to do so within a period to be specified by the PD in his demand aforesaid, then the PMU may rectify or remove and re-execute the work, remove and replace with others, the materials and articles complained of, as the case may be, by his own workman or by other contractor and recover from the contractor toward the cost thereof a sum equal to the sum actually incurred by the engineer-in-charge (whose certificate as to the amount of the work shall be final and binding on the parties plus departmental charges on the amount so incurred equal to ten (10) percent or such smaller amount as the Project Director (whose decision in writing shall be final) may decide, and deduct the same from any money due or that becomes due to the contractor under this contract or on any account whatsoever, due by PGSHF to the contractor. Measures of rectification will be decided by the Project Director and may include additional work necessary to strengthen or set right the unusual work carried out by the contractor.

LABOUR

Clause 32: Application of labour laws and rules

The contractor shall employ labor, provide all facilities and pay wages to his work people or employees in accordance with the labor laws or enactments relating thereto and rules framed there under, in force from time to time.

Clause 33: Contractor liable for payment of

(1) In every case in which by virtue of the provisions of Section 12, sub section (1) of the workman's Compensation Act 1923, government is obliged to pay compensation to a workman employed by the contractor in execution of the works, PGSHF will

compensation to injured workman, or in case of death to his relations

recover from the contractor the amount of the compensation so paid and without prejudice to the rights of the PGSHF under section 12 sub section (2) of the said Act. PGSHF shall be at liberty to recover such amount or any part thereof, by deducting it from the security deposit or from any sum due by PGSHF to the contractor, whether under the contract or otherwise.

(2) PGSHF shall not be bound to contest any claim made against it under section 12, sub section (l) of the said Act, except on the written request of the contractor and upon his giving to the government full security for all costs for which PGSHF right become liable in consequence of contesting such claims.

Clause 34: Use of donkeys and other animals

(i) No contractor shall use donkeys or other animals with breaching of string or rope. The breaching must be at least 75mm wide and should be of tape (Nawar).

(ii) No animal suffering from sores, lameness or emaciation or which is immature shall be used on the work.

COMMENCEMENT, TIME AND DELAYS

Clause 35: Commencement of work.

The contractor shall commence the works on the site within the period named in the memorandum, after the receipt by him of an order in writing to this effect from the PD and shall proceed with the same with due diligence and without delay except as may be expressly sanctioned or ordered by the PD or be wholly beyond the contractor's control.

Clause 36: Time for completion

Subject to. any requirements in the specifications to the completion of any portion of the works before completion of the whole, the whole of the works shall be completed within the time stated in the memorandum or such extended time as may be allowed under clause 37 hereof.

Clause 37: Extension of time for

If by reasons of the amount of extra or additional work of any kind or variation of form, quality or quantity of the works or any part thereof ordered by Project Director, or on the ground of his having been

completion

unavoidable hindered in the execution of the work or on any other ground or other special circumstances of any kind whatsoever, or any cause beyond the reasonable control of the contractor, the work is delayed or impeded or the contractor prevented from whether by the PD or otherwise howsoever, or hindered in the execution or completion of the work or any part thereof, whether such delay or impediment or prevention, or hindrance occurs before or after the time or extended time fixed for completion the contractor shall apply in writing to the PD within thirty days of the date of such circumstances, the full and detailed particulars of his claim on account of which he desires an extension as aforesaid.

The Project Director shall, if in his opinion (which shall be final) reasonable grounds shown therefore by the contractor are such as fairly to entitle the contractor to an extension of time for the completion of the work, authorize him from time to time in writing, either prospectively or retrospectively, such extension of time for the completion of the work or any part thereof, as may in his opinion be necessary or proper.

Clause 38: No work at night or on Fridays/ Public holidays

Subject to any provision to the contrary contained in the contract, none of the permanent work shall save as here in after provided be carried on during the night or on Fridays or public holidays without the permission in writing of the engineer-in-charge save when the work is unavoidable or absolutely necessary for the saving of life or property or for the safety of the works in which case the contractor shall immediately advise the PD. Provided always that the provisions of this clause shall not be applicable in the case of any work which it is customary to carry out by rotary or double shifts.

Clause 39: Compensation of delay

(a) The time allowed for carrying out the work as entered in the tender shall be strictly observed by the contractor. The works shall throughout the stipulated period of the contract be proceed with all due diligence in accordance with the program of work, as approved by the PD or any amended program of work approved by the PD from time to time (time and quality being deemed to be the essence of the contract on the part of the contractor) and the contractor shall pay as compensation an amount equal to one per cent of the amount of contract, subject to a maximum of 10% or such smaller amount as the Project Director (Project Director decision in writing shall be

final) may decide on the amount of the estimated cost stated in item(b) of the memorandum of work annexed hereto for every day that the work remains uncommented or unfinished after the-proper date.

(b) In order to ensure good progress during the execution of the work the contractor shall be bound, in all cases in which time allowed for any work exceeds thirty days, to complete each part of the work or its component, as per program of work or *any* revision or amendment to it approved by the PD. In the event of the contractor failing to comply with this condition, without sufficient reasons acceptable to the PMU, he shall be liable to pay as compensation an amount equal to one per cent or such smaller amount as the

Project Director whose decision in writing shall be final may decide on the estimated cost of the work as name in the item (b) of the memorandum hereto annexed for every day that the due quantity of work remains incomplete. Provides always that the entire amount of the compensation to be paid under the provisions of this clause shal1 not exceed ten percent of the estimated cost stated in item (b) of the memorandum of work annexed hereto.

Compensation for inadequate funding

(c) If the funds required for completion of contract are not provided within two years of the stipulated date of completion, contractor may ask for finalization of his contract. All recoveries due from contractor (mobilization, secured advance, machinery hire charges, etc.,) will be made before finalization of contract.

CERTIFICATE OF COMPLETION

Clause 40: Certification of completion of work

Without prejudice to the right of the PGSHF under any such clause(s) herein contained, as soon as in the opinion of the PMU Engineering Wing, the works shall have been substantially completed and shall have satisfactorily passed any final test that may be prescribed by the contract, the Project Director on the certification will issue to the contractor a certificate of completion in respect of the work, and the period of maintenance of work shall commence from the date of such

certificate, provided that the Project Director give such a certificate with respect to any independent part of the works before the completion of the whole of the works, and when any such certificate is given in respect of such a part of the works, such part shall be considered as completed and the period of maintenance of such part shall commence from the date of such certificate. Provided also that a certificate of completion given in accordance with the foregoing provisions of any part of the works shall not be deemed to certify completion of any ground or surface. Requiring reinstatement, unless such certificate shall express1y so state. Provided further that no such certificate shall be given nor shall the works or any of its parts be considered to be complete until the contractor shall have removed from the premises on which the works or any such parts shall be executed, all scaffoldings, surplus materials of all kinds and rubbish, buildings and other construction materials of all kinds and cleaned off the dirt from all woodwork, doors, windows, walls, floors, or other parts of any building or buildings, or road works and road structures, water supply, sewerage or drainage works, sanitary installations, gas and electric fittings, in, upon, or about which the works are to be executed, or which he may have had possession for the purpose of the execution thereof, nor until the works shall have been measured by the PMU Engineering Wing whose measurements shall be binding and conclusive against the contractor.

If the contractor shall fail to comply with the requirements of this clause as to the removal of scaffoldings, surplus material of all kinds and rubbish as aforesaid and cleanings of dirt on or before the date flexed for the completion of the works, the Project Director may at the expense of the contractor, remove such scaffoldings of surplus materials of all kinds and rubbish and dispose of the same as he thinks fit, and clean off such dirt as aforesaid and the contractor shall forthwith pay the amount of all expenses so incurred, and shall have no claim in respect of any such scaffoldings or surplus materials, of all kinds as aforesaid, except for any sum actually realized by sale thereof.

ALTERATIONS, ADDITIONS AND OMISSIONS

Clause 41: The Project Director shall have power to make any alteration in,

Alteration in specification and drawing

Alterations, omissions or substitutions do not invalidate the contract

Extension of time in consequence of alterations

omission, from, addition to, or substituted for, the original specification, drawing, design and instructions that may appear to him to be necessary or advisable during the progress of the work, and the contractor shall be bound to carry out the works in accordance with any instructions which may be given to him in writing signed by the PD, and such alterations, omissions, additions or substitutions shall not invalidate the contract, and any altered, additional or substituted work which the contractor may be directed to do in manner above specified as part of the work, shall be carried out by the contractor on the same conditions in all respects on which he agreed to do the main work, and at the same rates as are specified in the tender (bid. schedule for the main work). The time for the completion of the work shall be extended in the proportion that the altered, additional or substituted work bears to the original contract work and the certificate of the PD shall be conclusive as to such proportion.

And, if the altered, additional or substituted work includes any item of work, for which no rate is specified in this contract then such items of work shall be carried out at the item rates enforced at the time or receipt of tenders with reference to which the tender for the work was submitted by the contractor.

Rate of works not in bid schedule or in the estimates.

If such altered, additional or substituted items(s) of work is not entered in the bid schedule, then the contractor, shall within seven days of the date of receipt of the orders to carry out the work inform the Project Director of the rate which it is his intension to charge for such items of work and if the Project Director does not agree to this rate, or the approval to this rate (or the negotiated rate, if any), is not, communicated to the contractor within a period of thirty (30) days reckoned, from the date of receipt by the Project Director of the proposed rate, the Project Director shall by a notice in writing be at liberty to cancel his order to carry out such item, of work and arrange to carry it out in such a manner as he may consider advisable, provided always that if the contractor shall commence work or incur an expenditure in regard thereto, before the rates shall have been determined as lastly hereinafter mentioned, he shall do so at his own risk and cost.

No deviation from specification stipulated in the contract or additional items of work shall be carried out by the contractor unless the rate of

the substituted, altered or additional items have been approved in writing failing which PGSHF will not be bound to entertain any claim on this account. The interpretation of the Project Director in the event of any dispute due to any ambiguity in the specification or nomenclature shall be binding and final.

Clause 42: No compensation for alteration in or restriction of work to be carried out, If variation does not exceed 20%.

1. If at any time after the commencement of the work, the Project Director shall for any reason whatsoever, not require the whole thereof as specified in the tender (bid schedule annexed hereto) to be carried out, or increase or decrease in the quantity of work included in the contract or omit any such work, or change the contract or quality or kind of any such work, or change the levels, lines, position and dimensions of any part of the works, or require, the contractor to execute additional work of any kind necessary for the completion of the work, the Project Director shall give notice, in writing of this fact to the contractor, who shall have no claim to any payment or compensation whatsoever on account of any profit or advantage which he might have derived from the execution of the work in full, but which he did not derive in consequence of the full amount of the work not having been carried out; neither shall he have any claim for compensation by reasons of any alteration having been made in the original specifications, drawings, designs, and instructions which shall involve any curtailment or increase of the work, as originally contemplated; nor shall the contractor be entitled to any adjustment in the unit rate/price or amount of the contract, if the aggregate effect of all such alterations, additions, omissions, or adjustments (other than those arising out by reasons of price variation. under clause 55 hereof) on completion or the whole of the works, does not exceed 20 per cent of the sum named in paragraph of 1 (one) of this tender.

Variation exceeding 20%

2. If, on completion of the whole of the works it shall be found that a reduction or increase greater than 20 per cent of the sum named in paragraph 1 of the tender results from the aggregate effect of all increases, decreases, omissions or adjustments (other than those arising out because of price variation under clause 55 hereof), as a result of the requirement of' the engineer-in-charge, the amount of, the contract price shall be

adjusted by such sum(s) as may be I determined by the Project Director and the contractor In the, event of disagreement, the Project Director shall fix such sum as shall, in his opinion, be reasonable and proper, regard being had to all materials and relevant factors including the contractor's cost and over heads.

MAINTENANCE AND DEFECTS

Clause 43: Period of Maintenance

(1) The period of maintenance mentioned in item (i) of the memorandum hereto annexed shall be calculated from the date of completion of the works certified by the Project Director in accordance with clause 40 hereof or in the event of more than one certificate having been issued by the Project Director under the said clause, from the respective dates so certified, and in relation to the period of maintenance the expression the ‘work' shall be construed accordingly.

Execution of work of Repair, etc.,

(2) The works shall at or as soon practicable after expiration, of the period of maintenance be delivered to the Project Director in as good and perfect condition to the satisfaction of PGSHF as that in which they were at the commencement. of the period of maintenance, the contractor shall execute all such works of repair, amendment, reconstruction, rectification and making good of defects, imperfection, shrinkage or other faults as may be required of the contractor in writing by the Project Director during the period of maintenance or within) fourteen days after its expiration as a result of an inspection made by or on behalf of the Project Director prior to its expiration. I

Cost of execution of works of repair, etc.

(3) All such works shall be carried out by the contractor at his own expense, if the necessity thereof shall, in the opinion of the Project Director, be due to use of materials or workmanship not in accordance with the contract or to neglect or failure on the part of the contractor to comply with any obligation expressed or implied on the contractor's part under the contract. If in the opinion of the Project Director such necessity shall be due to any other cause, of the value of such work shall be ascertained and paid for, as if it were an additional work.

Remedy of contractor's failure to carry out work required.

(4) If the contractor shall fail to do any such work as aforesaid, required by the Project Director shall be entitled to carry out such work by his own workmen, or by other contractor(s) and if such work is a work which the contractor should have carried out at the contractor's own cost, shall be entitled to recover from the contractor towards the cost thereof a sum equal to the actual - expenditure so incurred by the Project Director (whose certificate as to the amount of the work shall be final and binding on the parties) any may deduct the same from any moneys due or that may become due to the contractor.

Clause 44: Contractor liable to male good damages and for any imperfection noticed during period of maintenance.

If the contractor or his work people or servant shall break, deface, injure or destroy any part of a building in which they may be working or any building, road, road work, road Structure water supply, sewerage, and drainage works, sanitary fittings and electrical installations, fences, enclosures, water pipes, cables, drains, electrical or telephone posts or any works, trees, grass or grass land, or cultivated ground contiguous to the premises on which the w6rk, or any part of its is being executed, or if any damage shall happen to the work, while in progress from any cause whatsoever or any imperfections become apparent in it within the specified period of maintenance In item No. (i) of the memorandum hereto annexed. after a certificate, final or otherwise of its completion shall have been given by the Project Director as aforesaid, the contractor shall make the same good at his own expense, or in default, the Project Director may cause the same to be made good by other workmen, and deduct the expenses (of which the certificate of the, Project Director shall be final) from any sums that may then, or at any time thereafter may become due to the contractor, or from his security deposit.

ADVANCES TO CONTRACTORS

Clause 45: Secured advance on materials brought to site

Should the contractor, whose contract is for finished work require an advance on the security of material of imperishable nature brought by him to, the site, the Project Director shall assess the value of such materials and the contractor may be paid an advance up to an amount not exceeding seventy-five per cent (the decision of the Project Director as to this percentage shall be final) of the value of the materials assessed by the PMU. The materials shall remain the

property of the government and the contractor shall not remove it from the site without the written permission of the Project Director. The contractor shall be responsible for any loss to the materials due to the contractor postponing the execution of the work or to the shortage of or misuse of the materials and against the expenses entailed for their proper watch and safe custody.

The recovery of the amount of such advance shall be made from the contractor's bill for the work done, as the materials are used in the work.

PAYMENTS

Clause 46: Bills to be on prescribed form

The contractor shall submit all bills on the form prescribed by the Project Director to be had on application at the PMU and the charges in the bills shall always be entered at the rates specified in the tender (bid schedule) or in the, case *of* any extra work ordered in pursuance *of* the conditions and not mentioned or provided for in the tender, at the rate hereinafter provided for such works.

Clause 47: Bills to be Submitted monthly

The contractor shall submit each month on or before the date fixed by the Project Director a bill, on the basis of measurements carried out by the contractor through his own staff, for all works executed in the previous month, and the PMU Engineering Wing shall take or cause to be taken the requisite measurements for the purpose of having the same verified and the claim, as far as admissible adjusted, if possible, before the expiry of ten days from presentation of the bill subject to the condition laid down in item(s) of the memorandum of work. If the contractor does not submit the bill within the time fixed as aforesaid, the Project Director may depute the PMU Engineering Wing to measure up the work in the presence of the contractor or otherwise and the PMU may prepare a bill from such measurements, which shall be binding on the; contractor in all respects.

Clause 47-A Payments of items with imbalance rates

If a contractor quoted such disproportionate rates in his tender which deviate from the rates provided in the technically sanctioned estimate, the payment of items whose rates are lower will be made at tendered rates(s) in full on the execution of items (s) but the payment of item whose rates are higher shall be made at the rates depicted in

technically sanctioned estimate, on the execution of such items, the balance payment shall be withheld by the Project Director till the completion of the work of items for which low rates have been quoted.

Clause 48: Deduction of security deposit

At the time of making any payment to the contractor for the work done under this contract, the Project Director shall retain from the amount payable to the contractor, the amount of security deposit at the percentage rate specified in item (d) of the memorandum of work annexed hereto. The earnest money of the contractor on execution of the contract, will however, be adjusted towards, the amount of such security deposit to be retained from the amount of his first bill of the work done by him and payable to the contractor under this contract.

All compensations of other sums of money payable by the contractor to the PGSHF under the terms of this contact may be deducted from the amount of his security deposit of the contract or from any sums which may be due or may become due to the contractor by the PGSHF on any account whatsoever, and in the event of his security deposit being reduced by such deductions, the contractor shall, within ten days there-after, make good in cash any sum or sums which may have been deducted from his security deposit, or may be made good through additional deductions from his bill or dues.

Clause 49: Conversion of security deposit into profit bearing securities.

If the contractor so desires and makes a written request to the Project Director to the effect that the amount of security deposit retained from

the bills of the contractor may be converted into the recognized form of profit bearing security at the cost of the contractor, the amount of, security deposit retained from bills of the, contractor shall be deposited in any of the following banks:

1. National Bank of Pakistan Ltd.

2. Habib Bank Ltd.

3. United Bank Ltd.

4. Muslim Commercial Bank Ltd.

5. Allied Bank of Pakistan Ltd.

6. The Bank of Punjab

and pledged in the name of the Project Director concerned and refunded to the contractor in prescribed manner.

Clause 50: Refund of security deposits

(a) The amount retained as security deposits shall not be refunded to the contractor before the expiry of six (6) months in the case of original work upto Rs. 5.0 million and twelve (12) months or even more, as may be determined by the Project Director with the prior approval of the Executive Director (Engg.), in the case of works valuing above Rs. 5.0 million, after the issue of the certificate of completion of the work under clause 40 hereof by the Project Director provided that in case the contractor is required by the Project Director to rectify any imperfection, damage, defects or other faults in work, etc. during the period of maintenance, the security deposit shall not be refunded till the contractor has fulfilled his obligations under clause 43 and 44 hereof to the satisfaction of the Project Director which shall be based on certification of the PMU Engineering Wing.

(b) Should the contractor so apply in writing to the Project Director, the amount of security deposit will be refunded to the contractor, three (3) months after the issue of certificate of completion of work by the Project Director under clause 40: subject to the production of bank guarantee from a scheduled bank in Pakistan to the satisfaction of and in the form suitable to the Project Director, for the same amount covering the balance of period of maintenance, to the effect that the contractor shall fulfill his obligations under clause 43 and 44 of the contract.

(c) Subject to the conditions stipulated in sub-clause (a) of this clause in the case of contracts for maintenance and repair works, the security deposits would be refunded to the contractor after the expiry of three (3) months of the issue of certificate of completion of work by the Project Director.

Clause 51: The contractor shall on submitting the bill be entitled to receive a

Payment on intermediate certificate to be regarded as advances	monthly payment proportionate to the part thereof then approved and passed by the Engineer-in-charge, subject to the condition laid down in item(s) of the memorandum, whose certificate of such approval and passing of the sum so payable, shall be final and conclusive against the contractor. But all such intermediate payments shall be regarded as payment by way of advance against the final payment only, and not as payment for work actually done and completed and shall not preclude the requiring of bad, unsound, imperfect or unskillful work to be removed and taken away and reconstructed, or re-erected or be considered as an admission of the due performance of the contract, or any part thereof in any respect, or the accruing of any claim: nor shall it conclude, determine, or affect in any way the power of Engineer-in-charge, under these conditions or any of them as to the final settlement and adjustment of the accounts or otherwise, or in any other way vary or affect the contract.
Clause 52: Final bill to be submitted within one month	The final bill shall be submitted by the contractor within one month of the date, fixed for completion of the works, otherwise PMU Engineering Wing certificate of the measurement and of the total amounts payable for the works accordingly, shall be final and binding on all parties.
Clause 53: Procedure for payment to firms	The PGSHF may refuse or suspend payment on account of a work when executed by a firm, or by a contract described in their tender as a firm, unless receipts are signed by all the parties or one of the partners or some other person, producing power of attorney enabling him to give actual receipts on behalf of the firm.
Clause 54: Sums payable by way of compensation to the considered as reasonable compensation without reference to actual loss	All sums payable by way of compensation under any of these conditions, shall be considered as reasonable compensation to be applied to the use of government, without reference to the actual loss or damage sustained, and whether or not any damage shall have been sustained

VARIATION IN PRICES OF SPECIFIED MATERIAIS

Clause 55: Variation in Prices

Where any variation (increase or decrease), to the extent of 5% or more, in the price of any of the item mentioned in sub-clause (2) below takes place after the acceptance of tender and before the completion of contract, the amount payable under the contract shall be adjustable to the extent of the actual variation in the cost of the item concerned.

No price variation under the clause shall be admissible except in respect of the following items:-

i. Cement
ii. Steel
iii. M.S Bars (Plain and deformed)
iv. M.S Sections
v. High Tensile steel wire
vi. M.S & G.I Pipes
vii. Asbestos cement pipes.
viii. P.V.C pipes
ix. R.C.C/P.C.C Pipes
x. Bitumen.
xi. High speed diesel
xii. Bricks
xiii. Brick
xiv. Tiles
xv. Gutka
xvi. Stone aggregate
xvii. Stone metal for sub-base
xviii. Stone metal for base-course
xix. Crushed bujri
xx. Labor

The base price for the purposes of calculation of the price variation shall be the price prevalent in the month during which the last day of the submission of tender falls.

The price variation under this clause shall be worked out on the basis of the price of the particular item prevalent in a particular District on first day of each month as per price list of such manufactures or suppliers at such places as are notified by the

Finance Department from time to time. The prices of the manufacturer or supplier at the place(s) so notified shall be applicable to the particular District or the entire Punjab (where district-wise list of manufacturers or suppliers has not been notified).

If no notification in respect of any of the item mentioned in sub clause (2) is issued under sub-clause (4) no price variation shall be admissible in respect of that item during that month.

The amount payable or deductible in respect of item No. (i) to (x) of sub clause (2) shall be calculated on the basis of the quantity of the item actually consumed on the work during the month.

The amount payable or deductible in respect of item No. (v) of sub clause (2) shall be calculated on the basis of the actual quantity of cement and steel bars used in the manufacture of the pipes during the month.

No escalation shall be allowed to the contractor in the respect of the period extended for the completion of the work due to his own fault.

If, under the existing codal rules, secured advance is paid on all or any of the imperishable items mentioned at (ii) to (vi) & (viii) to (ix) in sub clause (2) above, no price variation shall be admissible on such item(s) in respect of the quantity or quantities for which secured advance has been paid to the contractor.

The increase or decrease in the contract price subsequent to any increase or decrease in the cost of high speed diesel shall be calculated from the increase or decrease in the basis price of high speed diesel using the following formula:

Increase or decrease = a x VOW x (CPD-BPD) / BPD in contract price.

Where :

VOW : the value of the work for which payment has been certified by the Engineers In charge. Executed subsequent to such increase or decrease in the Basic Price as shall be obtained by applying the approved unit rates and prices entered in the measurement book.

CPD : current price of high speed diesel, and

DPD : basic price of high speed diesel.

Factor a = 0.15 for Highway / Roads works &

a = 0.07 for buildings and R.C.C structures &

a = 0.07 for Irrigation Works

The increase or decrease in the contract price subsequent to any increase or decrease in the cost of labor shall be calculated from the increase or decrease in the basic price of labor using the following formula:

Increase or decrease = B x VOW x (CLR-BLR) / BLR in contract price.

Where :

VOW : the value of the work for which payment has been certified by the engineer in charge, executed subsequent to such increase or decrease in the basic price as shall be obtained by applying the approved unit rates and prices entered in the measurement book.

CLR : current labor rates for unskilled workers (as published by Bureau of Statistics).

BLR: Basic labor rates of unskilled workers on the date of receipt of tenders (as published by Bureau of statistics).

FACTOR B: 0.15 both for building & road works &

FACTOR B: 0.15 for Irrigation Works.

Ref: Finance Department, Government of the Punjab Notification No.RO (Tech) FD 1-2/2007(Provl) dated 28.04.2010.

CLAIMS OF CONTRACTOR

Clause 56: Bills to be submitted monthly

The contractor shall deliver in the office of the Project Director on or\before the 10th day of every month during the continuance of the work covered by this contract a return in such form as the Project Director may from time to time prescribe showing details of any rate, amount and work claimed as extra, and such return shall also contain the value of such work which the contractor may consider himself to be entitled up to the end of the previous month, which value shall be based upon the rates and prices mentioned in the contract (bid schedule) or the rate determined pursuant to clause 41 hereof. The contractor shall include in such monthly returns particulars of all claims of what so ever kind and howsoever arising, which at the date

thereof he has or may claim to have, against the Project Director under or in respect of or in any manner arising out of the execution of the works, and the contractor shall be deemed to have waived all claims not included in such returns and will have no right to enforce any claim not so included, whatsoever be the circumstances.

Clause 57: Claims for payment of extraordinary nature

No claim for payment of extra ordinary nature such as claim of an extra ordinary nature, bonus for extra labour employed in completion of the work before the expiry of the contractual period at the request of the Project Director claim for compensation where the work has been temporarily brought to a stand-still through no fault of the contractor, shall be allowed, unless and to the extent that the same shall have been expressly sanctioned by the Punjab Government/PGSHF.

Clause 58: Time Limit for unforeseen claims

Under no circumstances whatsoever shall the contractor be entitled to any compensation on account of the contract unless the contractor shall have submitted a claim in writing to the Project Director within one month of the cause of such claim occurring.

Clause 59: Claim for compensation for delay in the execution of the work

No compensation shall be allowed for any delay in execution of the work on account of water standing in borrows pits or compartment. The rates inclusive for hard or rocky soil, excavation had, sub soil water or water standing in borrow pits, and no claim for extra rate shall be entertained, unless expressly verified and confirmed by Project Director.

REMEDIES AND POWERS

Clause 60: Action when whole of security deposit is forfeited

In any case in which under any clause or clauses of the Contract, the contractor shall have rendered himself liable to pay, compensation amounting to whole of the security deposit or in the opinion of the Project Director has abandoned the contract, or is not executing the works in accordance with the contract or is persistently or flagrantly neglecting to carry out his obligations under the contract, or if the contractor employs any employee of the PGSHF in defiance to the provisions of clause 32 thereof the Project Director on behalf of the PGSHF may after giving fourteen (14) days notice in writing to the Contractor, rescind the Contract (of which rescission notice in writing

to the Contractor under the hand of the Project Director shall be conclusive evidence and in which case the security deposit of the Contractor; shall stand forfeited, and be absolutely at the disposal of PGSHF. And in case the Contract shall be rescinded under the provisions aforesaid):-

(i) the contractor shall have no claim to compensation for any loss sustained by him by reasons of his having purchased or procured any materia1s, or entered into any engagement, or made any advances on account of or with a view to the execution of the works or the performance of the contract.

(ii) The contractor shall not be entitled to recover, or be paid any sum for any work actually performed under this contract, unless and until the Project Director will have certified in writing. The performance of such work and the value payable in respect thereof, and he shall only be entitled to be paid the value so certified , after deducting there from the amount of aforesaid compensation and other charges duly ascertained and certified by the PMU Engineering Wing to be payable by the contractor. But if such sum payable by the contractor for any losses, compensation or any other charge shall exceed the sum for any work actually performed under the contract and certified by the PD amount of such excess shall be deemed a debt due by the contractor to the PGSHF and shall be recovered accordingly.

Clause 61: Work at the risk and expense of the contractor

In every case in which the contract should be rescinded under clause 60 hereof and in the opinion of the Project Director such work should be done at the risk and expense of the contractor without thereby avoiding the contract or relieving the contractor from any of his obligation or liabilities under the contract or affecting the rights and powers conferred on the PGSHF or the Project Director by the contract, the Project Director on behalf of the PGSHF, after giving fourteen (14) days' notice in writing to the contractor, shall have powers to adopt any of the following courses, as may in the opinion of the Project Director be desirable:-

(a) To measure up the work of the contractor and to take such part

thereof, as shall be executed out of his hands and to give it to another contractor to complete, in which case any expenses, which may be incurred in excess of the sum which would have been paid to the original contractor, had the whole of the work been executed by him (of the amount of which excess, the certificate in writing of the Project Director shall be final and conclusive) shall be borne and paid by the original contractor, and may be deducted from any money due to him by the PGSHF, under the contract or otherwise, or from his security deposit or from the value of the performance security given by the contractor under clause.7 hereof.

(b) To employ labour paid by the PGSHF or to supply materials or supply / arrange tools and plants to carry out the works or any part of the works, debiting the contractor with the cost of the labour and the price of the materials and cost of supply/arrangement, operation and maintenance of tools and plants of the amount of which cost and price, a certificate, of the Project Director shall be final and conclusive against the contractor, plus PGSHF charges on the amount so incurred equal to ten per cent or such smaller amount as the Project Director (whose decision in writing shall be final) may decide, and crediting him with the value of the work done, in all respects, in the same manner and at the same time and rates, as if it had been carried out by the contractor under the , terms of his contract, the certificate of the PMU Engineering Wing as to the value of the work done shall be final, and conclusive against the contractor). In the event of any of the above courses mentioned in this clause being adopted by the Project Director, the contractor shall have no claim to compensation for any loss sustained by him by reason of his having purchased or procured any materials, or entered into any engagement, or made any advances on account of, be with a view to the execution of the works or the performance of the contract

In the event of any of the above courses mentioned in this clause being adopted by the Project Director, the contractor shall have no claim to compensation for any loss sustained by him by reason of his having purchased or procured any materials, or entered into any engagement, or made any advances on account of, be with a view to, the execution

of the works or the performance of the contract.

Note: After having approval for rescinding the contract from competent authority, the decision regarding implementation of clause 60 and 61, separately or simultaneously shall be discretion of the Project Director.

Clause 62: Contractor Remains liable to pay compensation if action not taken under clauses

In any case in which any of the powers, conferred upon the Project Director by clause 60 or by para (a) clause 61 hereof, shall have become exercise able and the same shall not be exercised, the non-exercise thereof shall not constitute a waiver of any of the conditions hereof, and such powers, shall notwithstanding be exercisable in the event of any future case of default by the contractor for which, by any clause or clauses hereof he is declared liable to pay compensation amounting to the whole of his security deposit and the liability of the contractor for past and future compensation shall remain unaffected.

Powers to take possession of or require removal or sell contractor's plant etc.

In the event of the Project Director putting in force either of the power vested in him under clause 60 or Para (a) of the preceding clause, he may, if he so desires, take possession of all or any tools, constructional plants, materials and stores, in or upon the works, or the site thereof, or belonging to the contractor, or procured by him and intended to be used for the execution of the work or any part thereof, paying or allowing for the same in account at the contract rates or in case of those not being applicable at current market rates to be certified by Project Director whose certificate shall be final; otherwise the Project Director, may by notice in writing to the contractor or his clerk of the works, foreman or other authorized agent, require him to remove such tools, construction plants, materials, or stores from the premises (within a time to be specified in such notice) and in the event of the contractor failing to comply with any such requisition, the PMU may remove them at the contractor's expense or sell them by auction or private sale on account of the contractor and at his risk in all respects and the certificate of the PD as to the expenses of any such removal, and the amount of the proceeds and expenses of any such sale, shall be final and conclusive against the con tractor.

Clause 63: Contract may be rescinded and security

If the contractor shall, in defiance of the Project Director(s) instructions to the contrary or without his written approval, assign or sublet his contract or attempts to do so or become insolvent, or commence any insolvency proceedings or to make any composition

forfeited for subletting bribing or if contractor becomes insolvent

with his creditors, or attempts so to do, or if any bribe, gratuity, gift, loan prerequisite, reward or advantage, pecuniary or otherwise, shall either directly or indirectly be given, promised or offered by the contractor, or his servants or agents to any way relating to his office, or employment, or if any such officer or person shall become in any way directly or indirectly interested in the contract, the Project Director may thereupon by notice in writing rescind the contract, and the security deposit of the contractor shall thereupon stand forfeited and be absolutely at the disposal of PGSHF and the same consequence shall ensue, as if the contract had been rescinded under clause 60 hereof and in addition to the contractor shall not be entitled to receive or be paid for any work therefore actually performed under the contract.

Clause 64: Deduction of amount due to Govt. on any account whatsoever to be permissible from sums payable to contractor

Any excess payment made to the contractor inadvertently or otherwise, under this contract or any account whatsoever, and any other sum found to be due to the PGSHF by the contractor in respect of this contract, or any other contract or work order, or on any account whatsoever, may be deducted from any sum whatsoever payable by PGSHF to the contractor, either in respect of this contract or any work order or contract or on any other account by any other Department of the Government or recovered from the contract or as arrears of land revenue.

SETTLEMENT OF DISPUTES

Clause 65: Procedure in disagreement

In the event of any disagreement between the Project Director and the contractor arising out of the contract, the matter shall first be referred to the Executive Director (Engg.) PGSHF for decision who shall, after making such enquiries, as he may deem fit, give his decision in writing not later than three months after the reference is made to him.

The period for decision of the case by the Executive Director (Engg.) PGSHF may however be extended by the Managing Director, PGSHF under special conditions according to the circumstances, justification, available in each case. The contractor shall forthwith give effect to the decision of the Executive Director (Engg.) PGSHF and shall proceed with due diligence, whether arbitration is intended or not.

Contractor dissatisfied with the decision of the Project Director

If the contractor be dissatisfied with the decision of the Executive Director (Engg.) PGSHF or if his decision is not forthcoming within the stipulated or extended period/periods and desires arbitration under the arbitration clause as hereinafter provided, he will give notice in writing of such intention to the Executive Director (Engg.) PGSHF within a period of twenty-eight days of the receipt of the Executive Director (Engg.) PGSHF decision or in case no decision is given, at the end of the period or periods within which the Executive Director (Engg.) PGSHF was to give his decision. The said notice shall contain the cause of action, material facts of the case and relief sought, failing which the decision of the Executive Director (Engg.) PGSHF shall become final, conclusive and binding, and the contractor shall be deemed to have forfeited or departed from the claim in excess of that allowed by the Executive Director (Engg.) PGSHF. The subsequent inflation/ increase in the amount of claim once preferred in the said notice shall not be allowed nor shall any other claim in respect of the same work be entertained from the contractor at any later stage.

Increase in amount of claim once preferred not allowed.

A reference to arbitration shall be made by the contractor in writing not later than three months after the completion of the work. Failure to make such a reference within this period shall be deemed to mean that the contractor has waived all claims in respect of all disputes.

(a) Disputes which may be referred to arbitration shall be limited to:

Dispute for arbitration limited

(i) Any question, difference, or objection, whatsoever which shall arise in any way, connected with or arising out of the contract or/and

(ii) The meanings of the operation *of* any part of the contract or / and

(iii) The rights duties and liabilities of either party to the contract or / and

(iv) Whether the contract should be terminated or has been rightly terminated and as regards the rights and obligations of the patties as a result of such termination.

Provided that those matters for which provision has been made in the contract for final and binding decision by the Executive Director (Engg.) PGSHF or the Project Director shall be excluded from arbitration.

(b) The venue of arbitration shall be in the Punjab. The contractor will have to deposit 20% of the amount of the claim up to Rs. *0.20* Million and 10 % of claim, exceeding Rs. *0.20* Million along with the claim. This amount will be refunded after the Award has been made Rule of the Court. Otherwise, the amount deposited will be forfeited.

Arbitration

(c) In, the event of any dispute arising in accordance with the limitations provided in *sub-clause (a)* of this clause, the same shall be referred to the decisions of a sole arbitrator to be appointed by ' the Managing Director, PGSHF, from among the officers of the PGSHF not below the rank of Project Director other than the Project Director in-charge of the work or Superintending Engineer (in service) of the Punjab Government Engineering Departments i.e., Communication & Works, Housing Urban Development, Public Health Engineering Department and Irrigation Department.

In case the claim preferred is for an amount up to half a million rupees, the decision of the sole arbitrator in such cases shall be

final and binding on the parties concerned.

(d) In case the amount of the claim preferred is over half a million rupees, the dispute shall be referred to the award of two arbitrators, to be appointed from the Project Directors of the PGSHF other than the Project Director in-charge of the work or Superintending Engineer (in service) of the Punjab Government Engineering Departments i.e., Communication & Works, Housing Urban Development, Public Health Engineering Department and Irrigation Department, one to be nominated by the Managing Director, PGSHF and the other by the contractor. In the case of the said two arbitrators not agreeing, the case shall be referred to the award of an umpire who shall be an officer of the PGSHF not below the rank *of* Executive Director/Chief Engineer (in service) of the Superintending Engineer (in service) of the Punjab Government Engineering Departments i.e., Communication & Works, Housing Urban Development, Public Health Engineering Department and Irrigation Department to be appointed by the Managing Director PGSHF. The decision of the two arbitrators/ umpire, as the case may be shall be final and binding on the parties concerned. Where the matter involves claim for the payment of recovery or deduction of money only, the amount, if any, awarded in the arbitration shall recoverable in respect of the matter so referred.

Schedule showing (Approximately) materials, to be supplied from the departmental store for works contracted to be executed and the rates at which they are to be charged for

(See clause 30)

Particulars	Rates at which the material will charged to the contractor		Place of delivery
	Unit	Rs.	
Bitumen in drums	Per Metric Ton		Highway Store at

Not Applicable

In the light of Foot Note.1

Foot Notes:

1. As per policy *Of* the Government vide P&D Department *No.* 4/54 P&D Ro (R&B) 90 Dated, 15.12.93, the bitumen of required quality and grade i.e 80/100 shall be arranged by the contractor himself and department shall issue no bitumen
2. No payment for the carriage of bitumen from Highway store to site of work will be made to the contractor.
3. The person or firm submitting the tender should see that the rates in the above schedule are filled up by the Project Director before the issue of the form prior to submission of the tender.

SCHEDULE SHOWINGEQUIPMENT TO BE SUPPLIED BY THE
PGSHF AT THE REQUEST OF THE CONTRACTOR

(SEE CLAUSE 30)

The Equipment and/or constructional plant listed in the following table are available with the Employer and can be provided to the contractor at his request at the rental rates and places set out therein.

Item	Description	Rental Price (Rs.)	Place of delivery
1	2	3	4
	Not Applicable		

SCHEDULE SHOWING THE NAMES OF MANUFACTURERS OR SUPPLIERS WHOSE PRICES FOR THE SPECIFIED MATERIALS AT THE PLACES SHOWN AGAINST EACH ARE TO FORM BASIS OF PAYMENT OF PRICE VARIATION.

"(See Clause 55)"

Name of Item	**Price at Places which are to form basis of Price Variation**
1	2
(i) Cement	As per rate placed at Website by the Finance Department, Govt. of the Punjab
(ii) Steel (a) M.S Bars (Plain & deformed)	
(b) M.S sections	
(c) High Tensile Steel wire	
(d) M.S, G.I pipe & MS Seamless Pipes	
(e) MS & GI Sheets	
(f) CI Specials	
(iii) Asbestos cement pipes	
(iv) PVC/ uPVC Pipes	
(v) PPRC Pipes	
(vi) HDPE pipes	
(vii) Cement and Steel Bars For R.C.C pipes	As per item (i) & (ii) above
(viii) Bitumen (Bulk & packed)	As per rate placed at Website by the Finance Department, Govt. of the Punjab
(ix) High Speed Diesel	To be ascertained by Advisory Committee notified by OGRA and rate placed on web site of Finance Department.
(x) Bricks, Tiles & Gutka	As per rate placed at Website by the Finance Department, Govt. of the Punjab
(xi) Stone Aggregates (Base, Sub Base,	

Crushed Bajri)	
(xii) Harrow Sand	
(xiii) Floor Tiles (Ceramic & porcelain)	
(xiv) Wood	
(xv) Aluminum Sections	
(xvi) paint (Interior & Exterior)	

Note: The bitumen for use in the road work shall be obtained by the contractor from National Refinery Limited, Karachi and documentary evidence in support thereof shall be produced to the Project Director for his reference and record.

CONDITIONS OF CONTRACT

FOR WORKS OF CIVIL

ENGINEERING CONSTRUCTION

PART II SPECIAL CONDITIONS OF CONTRACT

Table of Contents

1. Engineer's Duties and Authority 120
2. Engineer's Representative 121
3. Engineer Not Liable 121
4. Replacement of the Engineer 121
5. Language(s) and Law 122
6. Priority of Contract Documents 122
7. Shop Drawings 122
8. As-Built Drawings 122
9. Performance Security 123
10. Performance Security Binding on Variations and Changes 123
11. Programme to be Submitted 123
12. Cash Flow Estimate to be Submitted 123
13. Detailed Programme and Monthly Progress Report 124
14. Safety Precautions 124
15. Lighting Work at Night 125
16. Co-operation with other Contractors 125
17. Rates of Wages and Conditions of Labour 125
18. Employment of Persons in the Service of Others 125
19. Housing for Labour 126
20. Health and Safety 126
21. Epidemics 126
22. Supply of Water 126
23. Alcoholic Liquor or Drugs 126
24. Arms and Ammunition 127
25. Festivals and Religious Customs 127
26. Disorderly Conduct 127
27. Compliance by Subcontractors 127
28. Records of Safety and Health 127
29. Reporting of Accidents 127
30. Use of Pakistani Materials and Services 128
31. Commencement of Works 128
32. Final Cost of Project 128

PART II - SPECIAL CONDITIONS OF CONTRACT

(Mandatory Provisions not to be Amended / Substituted)

1. Engineer's Duties and Authority

With reference to Sub-Clause 2.1(b), the following provisions shall also apply:
The Engineer shall obtain the specific approval of the Employer before carrying out his duties in accordance with the following Clauses. The Employer may further vary according to need of the project;

(i) Consenting to the sub-letting of any part of the Works under Sub-Clause 4.1 "Subcontracting".

(ii) Certifying additional cost determined under Sub-Clauses 12.2 "Not Foreseeable Physical Obstructions or conditions"

(iii) Any action under Clause 10 "Performance Security" and Clauses 21,23,24 & 25 " Insurance" of sorts.

(iv) Any action under Clause 40 "Suspension"

(v) Any action under Clause 44 "Extension of Time for Completion"

(vi) Any action under Clause 47 "Liquidated Damages for Delay" or payment of Bonus for Early Completion of Works (SCC Sub-Clause 47.3)

(vii) Issuance of "Taking over Certificate" under Clause 48.

(viii) Issuing a Variation Order under Clause 51 except:

a) in an emergency* situation, as stated here below, or

b) if such variation would increase the Contract Price by the amount stated in the Appendix-A to Bid.

(ix) Fixing rates or prices under Clause 52.

(x) Extra payment as a result of Contractor's claims Clause

(xi) Release of Retention Money to the Contractor under Sub-Clause 60.3 "Payment of Retention Money".

(xii) Issuance of “Final Payment Certificate” under Sub-Clause 60.8.

(xiii) Issuance of “Defect Liability Certificate” under Sub-Clause 62.1.

(xiv) Any change in the ratios of Contract currency proportions and payments thereof under clause 72 “Currency and Rate of Exchange”.

(Note: Employer may further vary according to need of the project)

* (If in the opinion of the Engineer an emergency occurs affecting the safety of life or of the Works or of adjoining property, the Engineer may, without relieving the Contractor of any of his duties and responsibilities under the Contract, instruct the Contractor to execute all such work or to do all such things as may, in the opinion of the Engineer, be necessary to abate or reduce the risk. The Contractor shall forthwith comply with any such instruction of the Engineer. The Engineer shall determine an addition to the Contract Price, in respect of such instruction, in accordance with Clause 52 and shall notify the Contractor accordingly, with a copy to the Employer.)

2. Engineer’s Representative

The Employer shall ensure that the Engineer’s Representative is a professional engineer as defined in the Pakistan Engineering Council Act 1975 (V of 1976).

3. Engineer Not Liable

Approval, reviews and inspection by the Engineer of any part of the Works does not relieve the Contractor from his sole responsibility and liability for the supply of materials, plant and equipment for construction of the Works and their parts in accordance with the Contract and neither the Engineer's authority to act nor any decision made by him in good faith as provided for under the Contract whether to exercise or not to exercise such authority shall give rise to any duty or responsibility of the Engineer to the Contractor, any Subcontractor, any of their representatives or employees or any other person performing any portion of the Works. However, the Engineer shall also be held responsible for his unlawful, non-factual and unreasonable decisions.

4. Replacement of the Engineer

“If the Employer intends to replace the Engineer, the Employer shall, not less than 14 days before the intended date of replacement, give notice to the Contractor, of the name, address and relevant experience of the intended replacement Engineer. The Employer shall not replace the Engineer with a person against whom the Contractor raises reasonable objection by notice to the Employer, with supporting particulars.”

5. Language(s) and Law

(a) The Contract Documents shall be drawn up in the English language.
(b) The Contract shall be subjected to the Laws of Islamic Republic of Pakistan

6. Priority of Contract Documents

The documents listed at (1) to (6) of the Sub-Clause are deleted and substituted with the following:

(1) The Contract Agreement (if completed);
(2) The Letter of Acceptance;
(3) The completed Form of Bid;
(4) Special Stipulations (Appendix-A to Bid);
(5) The Special Conditions of Contract – Part II;
(6) The General Conditions – Part I;
(7) The priced Bill of Quantities (Appendix-D to Bid);
(8) The completed Appendices to Bid (B, C, E to L);
(9) The Drawings;
(10) The Specifications; and
(11) (any other).

In case of discrepancies between drawings, those of larger scale shall govern unless they are superseded by a drawing of later date regardless of scale. All Drawings and Specifications shall be interpreted in conformity with the Contract and these Conditions. Addendum, if any, shall be deemed to have been incorporated at the appropriate places in the documents forming the Contract.

7. Shop Drawings

The Contractor shall submit to the Engineer for review 3 copies of all shop and erection drawings applicable to this Contract as per provision of relevant Sub-Clause of the Contract. A copy shall be submitted to the Employer as well.

Review and approval by the Engineer shall not be construed as a complete check but will indicate only that the general method of construction and detailing is satisfactory and that the Engineer's review or approval shall not relieve the Contractor of any of his responsibilities under the Contract.

8. As-Built Drawings

At the completion of the Works under the Contract, the Contractor shall furnish to the Engineer 6 copies and one reproducible of all drawings amended to conform

with the Works as built. A set shall be provided to the Employer as well. The price of such Drawings shall be deemed to be included in the Contract Price.

9. Performance Security

The Contractor shall provide Performance Security to the Employer in the prescribed form. The said Security shall be furnished or caused to be furnished by the Contractor within 15 days after the receipt of the Letter of Acceptance. The Performance Security shall be of an amount equal to 10% of the Contract Price stated in the Letter of Acceptance. Such Security shall, at the option of the bidder, be in the form of either (a) bank guarantee from any Scheduled Bank in Pakistan or (b) bank guarantee from a bank located outside Pakistan duly counter-guaranteed by a Scheduled Bank in Pakistan.
The cost of complying with requirements of this Sub-Clause shall be borne by the Contractor.

10. Performance Security Binding on Variations and Changes

The Performance Security shall be binding irrespective of changes in the quantities or variations in the Works or extensions in Time for Completion of the Works which are granted or agreed upon under the provisions of the Contract.

11. Programme to be Submitted

The programme shall be submitted within 14 days from the date of receipt of Letter of Acceptance, which shall be in the form of:

i) a Bar Chart identifying the critical activities.

ii) a CPM identifying the critical path/activities.

(Employer to select appropriate one)

12. Cash Flow Estimate to be Submitted

The detailed Cash Flow Estimate shall be submitted within 21 days from the date of receipt of Letter of Acceptance

13. Detailed Programme and Monthly Progress Report

a) For purposes, the Contractor shall submit to the Engineer, the Employer and the Administrative Department, the detailed programme for the following:

(1) Execution of Works;
(2) Labour Employment;
(3) Local Material Procurement;
(4) Material Imports, if any; and
(5) Other details as required by the Engineer.

(b) During the period of the Contract, the Contractor shall submit to the Engineer, the Employer and the Administrative Department, not later than the 8th day of the following month, 10 copies each of Monthly Progress Reports covering with a copy to the employer:

(1) A Construction Schedule indicating the monthly progress in percentage;
(2) Description of all work carried out since the last report;
(3) Description of the work planned for the next 56 days sufficiently detailed to enable the Engineer to determine his programme of inspection and testing;
(4) Monthly summary of daily job record;
(5) Photographs to illustrate progress; and
(6) Information about problems and difficulties encountered, if any, and proposals to overcome the same.

(c) During the period of the Contract, the Contractor shall keep a daily record of the work progress, which shall be made available to the Engineer, the Employer and the Administrative Department, as and when requested. The daily record shall include particulars of weather conditions, number of men working, deliveries of materials, quantity, location and assignment of Contractor's equipment.

14. Safety Precautions

In order to provide for the safety, health and welfare of' persons, and for prevention of damage of any kind, all operations for the purposes of or in connection with the Contract shall be carried out in compliance with the Safety Requirements of the Government of Pakistan with such modifications thereto as the Engineer may authorise or direct and the Contractor shall take or cause to be taken such further measures and comply with such further requirements as the Engineer may determine to be reasonably necessary for such purpose.

The Contractor shall make, maintain and submit reports to the Engineer concerning safety, health and welfare of persons and damage to property, as the Engineer may from time to time prescribe.

15. Lighting Work at Night

In the event of work being carried out at night, the Contractor shall at his own cost, provide and maintain such good and sufficient light as will enable the work to proceed satisfactorily and without danger. The approaches to the Site and the Works where the night-work is being carried out shall be sufficiently lighted. All arrangement adopted for such lighting shall be to the satisfaction of the Engineer's Representative.

16. Co-operation with other Contractors

During the execution of the Works, the Contractor shall co-operate fully with other contractors working for the Employer at and in the vicinity of the Site and also shall provide adequate precautionary facilities not to make himself a nuisance to local residents and other contractors.

17. Rates of Wages and Conditions of Labour

The Contractor shall pay rates of' wages and observe conditions of labour not less favourable than those established for the trade or industry where the work is carried out. In the absence of any rates of wages or conditions of labour so established, the Contractor shall pay rates of wages and observe conditions of labour which are not less favourable than the general level of wages and conditions observed by other employers whose general circumstances in the trade or in industry in which the Contractor is engaged are similar.

18. Employment of Persons in the Service of Others

The Contractor shall not recruit his staff and labour from amongst the persons in the services of the Employer or the Engineer; except with the prior written consent of the Employer or the Engineer, as the case may be.

19. Housing for Labour

Save insofar as the Contract otherwise provides, the Contractor shall provide and maintain such housing accommodation and amenities as he may consider necessary for all his supervisory staff and labour, employed for the purposes of or in connection with the Contract including all fencing, electricity supply, sanitation, cookhouses, fire prevention, water supply and other requirements in connection with such housing accommodation or amenities. On completion of the Contract, these facilities shall be handed over to the Employer or if the Employer so desires, the temporary camps or housing provided by the Contractor shall be removed and the Site reinstated to its original condition, all to the approval of the Engineer.

20. Health and Safety

Due precautions shall be taken by the Contractor, and at his own cost, to ensure the safety of his staff and labour at all times throughout the period of the Contract. The Contractor shall further ensure that suitable arrangements are made for the prevention of epidemics and for all necessary welfare and hygiene requirements.

21. Epidemics

In the event of any outbreak of illness of an epidemic nature, the Contractor shall comply with and carry out such regulations, orders and requirements as may be made by the Government, or the local medical or sanitary authorities, for purpose of dealing with and overcoming the same.

22. Supply of Water

The Contractor shall, so far as is reasonably practicable, having regard to local conditions**,** provide on the Site, to the satisfaction of the Engineer or his representative, adequate supply of drinking and other water for the use of his staff and labour.

23. Alcoholic Liquor or Drugs

The Contractor shall not, otherwise than in accordance with the Statutes, Ordinances and Government Regulations or Orders for the time being in force, import, sell, give, barter or otherwise dispose of any alcoholic liquor or drugs, or permit or suffer any such importation, sale, gift, barter or disposal by his Subcontractors, agents, staff or labour.

24. Arms and Ammunition

The Contractor shall not give, or otherwise dispose of to any person or persons, any arms or ammunition of any kind or permit or suffer the same as aforesaid.

25. Festivals and Religious Customs

The Contractor shall in all dealings with his staff and labour have due regard to all recognized festivals, days of rest and religious and other customs.

26. Disorderly Conduct

The Contractor shall at all times take all reasonable precautions to prevent any unlawful, riotous or disorderly conduct by or amongst staff and labour and for the preservation of peace and protection of persons and property in the neighborhood of the Works against the same.

27. Compliance by Subcontractors

The Contractor shall be responsible for compliance by his Subcontractors of the provisions of this Clause.

28. Records of Safety and Health

The Contractor shall maintain such records and make such reports concerning safety, health and welfare of persons and damage to property as the Engineer may from time to time prescribe.

29. Reporting of Accidents

The Contractor shall report to the Engineer details of any accident as soon as possible after its occurrence. In the case of any fatality or serious accident, the Contractor shall, in addition, notify the Engineer immediately by the quickest available means.

30. Use of Pakistani Materials and Services

The Contractor shall, so far as may be consistent with the Contract, make the maximum use of materials, supplies, plant and equipment indigenous to or produced or fabricated in Pakistan and services, available in Pakistan provided such materials, supplies, plant, equipment and services shall be of required standard.

31. Commencement of Works

The Contractor shall commence the Works on Site within the period named in Appendix-A to Bid from the date of receipt by him from the Engineer of a written Notice to Commence. Thereafter, the Contractor shall proceed with the Works with due expedition and without delay.

32. Final Cost of Project

Final Cost of project shall be determined in accordance with the para-V of Government of Punjab, Finance Department letter No. RO(Tech.) FD.1-2/83-VI dated March 29, 2005. According to said letter, the final cost of tender/ payment shall be the same percentage above/ below the amount of revised sanctioned estimate as were at the time of approval of the tender.

SPECIFICATIONS-

TECHNICAL PROVISIONS (VOLUME – II)

Note: *All works relating to civil, structural, architectural, finishing, electrical, plumbing, sanitary and allied works, shall be executed in accordance with the applicable Government of Punjab C&W Department Specifications (for the execution of works), Punjab Architecture Department Building Finishing Materials and Specifications (June 2022) and Building Code of Pakistan (2021).*

All materials, workmanship, testing and installation shall comply with the relevant PSQCA, ASTM, ACI, BS and IEC Standards, as applicable, and shall be read in conjunction with the approved drawings, Bill of Quantities (BOQ) and Conditions of Contract.

DRAWINGS
(VOLUME – IV)

PUNJAB GOVERNMENT
SERVANTS HOUSING SCHEME AT RAWALPINDI

SUMMARY OF COST

MOSQUE

Sr. No.	Description	Amount (Rs.)
	MOSQUE	
1	CIVIL WORKS	
2	PUBLIC HEALTH WORKS	
3	ELECTRICAL WORKS	
	Total (Rs.):	

PUNJAB GOVERNMENT
SERVANTS HOUSING SCHEME AT RAWALPINDI

BILL OF QUANTITIES

MOSQUE

CIVIL WORKS

Sr. No.	Description of Items	Unit	Quantity	Unit Rate (Rs)	Amount (Rs)
1	Excavation in foundation on of building, bridges and other structures, including dabbling, dressing, refilling in layers around structure with excavated earth, watering and ramming lead upto one chain (30 m) and lift upto 5 f t. (1.5 m). b) By Excavator i) in ordinary soil	0%Cft	10.12		
1a	Cutting hard rock such as granite, ballast, hard lime stone or sand stone, etc. with chisels and hammers, for small foundations.	0%Cft	20.24		
1b	Site clearance and removing within 100 ft. (30 m). Ordinary	0%Sft	58.75		
1c	Regular excavation / cutting dressed required for development of plots for construction of housing units, mosques, commercial and education buildings etc., in all kinds of materials	0%Cft	400.00		
1d	Development of land/ area for construction of mosque etc., by filling with cut/ excavated material from item No. 1c including rehandling, placing, cost of hauling (all lead and lift) spreading, watering, compaction, equipment, labour tools and incidental necessary to complete this item of work. 85% maximum modified AASHTO dry density.	0%Cft	400.00		
2	Spraying termite proofing by using liquid FMC / Biflex / Terminex Exin/ Ms Hextar or equivalent @ specified suspension concenterate (SC), Mixing Ability-HEXTAR with Ratio (1:250) = 540 Sft or equivalent approved liquid applying with shower and certificate will be provided by the contractor for 10-years complete in all respect .as approved by the Engineer Incharge.	Sft	33,674.00		
3	Supplying and filling compacted Pit Run Gravel under Foundations, complete in all respects.	Cft	5,651.00		
4	Cement concrete plain including placing, compacting, finishing and curing complete (including screening and washing of stone aggregate): (i)1:4:8	%Cft	39.48		
5	Supplying and filling sand under floor; or plugging in wells.	%Cft	482.27		
6	Pacca brick work in foundation and plinth in:- i) Cement, sand mortar:- Ratio (1:5)	%Cft	119.25		
7	Pacca brick work in ground floor:- i) Cement, sand mortar:- Ratio (1:4)	%Cft	114.47		
8	Pacca brick work in First Floor:- i) Cement, sand mortar:- Ratio (1:4)	%Cft	13.25		
9	Pacca brick work in Second Floor:- i) Cement, sand mortar:- Ratio (1:4)	%Cft	2.70		

PUNJAB GOVERNMENT
SERVANTS HOUSING SCHEME AT RAWALPINDI
BILL OF QUANTITIES
MOSQUE
CIVIL WORKS

Sr. No.	Description of Items	Unit	Quantity	Unit Rate (Rs)	Amount (Rs)
10	Pacca brick work in Third Floor:- i) Cement, sand mortar:- Ratio (1:4)	%Cft	0.73		
11	**R.C.C Concrete**				
11.1	Providing ,laying,compacting and curing pre-mixed Cement Concrete of specified strength by using OP Cement of specified ratio including screening washing of aggregate ;mixing of constituents by using batching plant,transported by transit mixer and pouring with pumps,with specified consistency i/c the cost of shuttering, compaction with Viberator but excluding, the cost of Admixture, as approved and directed by the Engineer Incharge.(c) Substructure without shuttering (Foundations,Raft,Strip and Footing Beams and other structural members not mentioned above in 6(a) &(b).1:1.5:3	Cft	5,182.84		
11.2	Providing ,laying,compacting and curing pre-mixed Cement Concrete of specified strength by using OP Cement of specified ratio including screening washing of aggregate ;mixing of constituents by using batching plant,transported by transit mixer and pouring with pumps,with specified consistency i/c the cost of shuttering, compaction with Viberator but excluding, the cost of Admixture, as approved and directed by the Engineer Incharge.(a) Superstructure (Slabs,beams,Columns, lintels, girders and prestressed members others cast in situ requiring formwork).1:1.5:3	Cft	13,059.07		
11.3	Providing ,laying,compacting and curing pre-mixed Cement Concrete of specified strength by using OP Cement of specified ratio including screening washing of aggregate ;mixing of constituents by using batching plant,transported by transit mixer and pouring with pumps,with specified consistency i/c the cost of shuttering, compaction with Viberator but excluding, the cost of Admixture, as approved and directed by the Engineer Incharge.(a) Reinforced cement concrete in roof slab, beams, columns lintels, girders and other structural members laid in situ or precast laid in position, or prestressed members cast in situ, complete in all respects: First Floor	Cft	585.00		
11.4	Second Floor	Cft	294.75		
11.5	Third Floor	Cft	448.73		

PUNJAB GOVERNMENT
SERVANTS HOUSING SCHEME AT RAWALPINDI
BILL OF QUANTITIES
MOSQUE
CIVIL WORKS

Sr. No.	Description of Items	Unit	Quantity	Unit Rate (Rs)	Amount (Rs)
12	Providing ,laying,compacting and curing pre-mixed Cement Concrete of specified strength by using OP Cement of specified ratio including screening washing of aggregate ;mixing of constituents by using batching plant,transported by transit mixer and pouring with pumps,with specified consistency i/c the cost of shuttering, compaction with Viberator but excluding, the cost of Admixture, as approved and directed by the Engineer Incharge.(a) Reinforced cement concrete in roof slab, beams, columns lintels, girders and other structural members laid in situ or precast laid in position, or prestressed members cast in situ, complete in all respects: Ground Floor Stair 1:1.5:3	Cft	360.79		
13	Providing ,laying,compacting and curing pre-mixed Cement Concrete of specified strength by using OP Cement of specified ratio including screening washing of aggregate ;mixing of constituents by using batching plant,transported by transit mixer and pouring with pumps,with specified consistency i/c the cost of shuttering, compaction with Viberator but excluding, the cost of Admixture, as approved and directed by the Engineer Incharge.(a) Reinforced cement concrete in roof slab, beams, columns lintels, girders and other structural members laid in situ or precast laid in position, or prestressed members cast in situ, complete in all respects Lintel (1:1.5:3)				
13.1	Ground Floor	Cft	142.97		
14	Cement plaster 3/8" (10 mm) thick under soffit of R.C.C roof slabs only, upto 20' height. a) 1:3				
14.1	Ground Floor	%Sft	83.10		
14.2	First Floor	%Sft	6.16		
15	Cement plaster 1:4 upto 20' (6.00 m) height:-				
15.1	a) Ground Floor (1/2" thick)	%Sft	415.00		
15.2	b) First Floor (1/2" thick) 20' to 30'	%Sft	48.10		
15.3	c) (1/2" thick) 30' to 40'	%Sft	14.40		
15.4	d) (1/2" thick) 40' to 50'	%Sft	19.13		
16	Dry rammed brick or stone ballast, 1½" to 2"(40 mm to 50mm) gauge.	%Cft	36.63		
17	Cement concrete plain including placing, compacting, finishing and curing complete (including screening and washing of stone aggregate): (i)1:2:4				
17.1	Ground Floor	%Cft	92.11		

PUNJAB GOVERNMENT
SERVANTS HOUSING SCHEME AT RAWALPINDI
BILL OF QUANTITIES
MOSQUE
CIVIL WORKS

Sr. No.	Description of Items	Unit	Quantity	Unit Rate (Rs)	Amount (Rs)
18	Fabrication of mild steel reinforcement for cement concrete, including cutting, bending, laying in position, making joints and fastenings, including cost of binding wire and labour charges for binding of steel reinforcement (also includes removal of rust from bars):- b) Deformed bars i) Grade 60	%Kg	755.97		
19	Providing and Laying Insulation material of Extruded Polystyrene XPS in Rigid Insulation / Foam Board on roof or walls, Density 32-38Kg/M, compressive strength 250-400 kpa, R-value 5 per inch thickness and water obsorption (1% by volume, cell structure clored cell) i/c cutting and placing in position. complete in all respect. i) 2" thick	%Sft	71.33		
20	Providing and laying roof insulation, comprising of single layer of tiles 9"x4½"x1½" (225x113x40 mm) grouted with cement sand mortar 1:3 laid over 2" (50 mm) thick earth (including mud plaster) over thermopore sheet, over polythene sheet 300 gauge over a layer of bitumen, complete in all respects:- (i) Thermopore sheet 1" (25 mm) thick	%Sft	71.33		
21	Providing, laying, testing and commissioning µ-PVC (Unplasticized Poly vinyl Chloride) Pressure pipe of nominal dia meter, conforming to PS-3051/BS-3505, Dadex / Popular / Beta or approved equivalent manufacturer, i/c the cost of solvent and specials complete as approved and directed by the Engineer Incharge. (a) 4" i/d (100 mm)	Rft	148.00		
22	Providing and installing P.V.C. bends, of B.S.S. i) Class `D' working pressure:- a) 4" i/d (100 mm) (Plain Bend)	Each	8.00		
23	Providing and installing P.V.C. bends, of B.S.S. i) Class `D' working pressure:- a) 4" i/d (100 mm) (Shoe Bend)	Each	8.00		
24	Khuras on roof 2'x2'x6" (600 x 600 x 150 mm)	Each	8.00		
25	Providing and laying superb quality Porcelain glazed tiles flooring of MASTER brand of specified size in approved design,Color and Shade with adhesive/bond over 3/4"thick (1:3) cement plaster i/c the cost of sealer for finishing the joints i/c cutting grinding complete in all respect as approved and directed by the Engineer Incharge. 600x600mm	Sft	7,400.27		

PUNJAB GOVERNMENT
SERVANTS HOUSING SCHEME AT RAWALPINDI
BILL OF QUANTITIES
MOSQUE
CIVIL WORKS

Sr. No.	Description of Items	Unit	Quantity	Unit Rate (Rs)	Amount (Rs)
26	Providing and laying superb quality Porcelain glazed tiles of Masterbrand, skirting/dado of specified size, Color and Shade with adhesive/ bond over 1/2"thick (1:2) cement plaster i/c the cost of and sealer for finishing the joints, cutting grinding complete in all respect as approved and directed by the Engineer Incharge	Sft	4,583.97		
27	Providing and laying superb quality Ceramic tile floors of Master/Stile brand or approved equivalent manufacturer of specified size, Glossy/Matt/Texture of approved Color and Shade as per approved design with adhesive bond, over 3/4" thick (1;2) cement sand plaster i/c the cost of sealer for finishing the joints i/c cutting grinding complete in all respects and as approved and directed by the Engineer Incharge. i) 12"x18"/12"x24"/10"x24" /8"x24"/12"x36"	Sft	512.67		
28	Providing and laying superb quality Ceramic tiles dado of Master/Stile brand or approved equivalent manufacturer of specified size, Glossy/Matt/Texture skirting/dado of approved Color and Shade with adhesive bond over 1/2" thick (1:2) cement plaster i/c the cost of sealer for finishing the joints i/c cutting grinding complete in all respects as approved and directed by the Engineer Incharge. i) 12"x18"/12"x24"/10"x24" /8"x24"/12"x36"	Sft	1,914.01		
29	Providing and laying Prepolished Granite of specified thickness and shade of full width of approved quality laid with adhesive bond over 3/4" thick (1:2) cement sand mortor bed , complete in all respect as approved and directed by the Engineer Incharge. i) 3/4" thick	Sft	1,863.70		
30	Providing and laying sub-base course of stone product of approved quality and grade, including placing, mixing, spreading and compaction of sub-base material to required depth, camber, grade to achieve 100% maximum modified AASHO dry density, including carriage of all material to site of work except gravel and aggregate. a) Crushed stone aggregate.	%Cft	73.60		
31	Providing and laying Tuff Pavers, having 7000 PSI, crushing strength of approved manufacturer, over 2" to 3" sand cushion i/c grouting with sand in joints i/c finishing to require slope complete in all respect. 50% Grey / 50% Coloured). a) 80-mm thick	Sft	8,059.00		

PUNJAB GOVERNMENT
SERVANTS HOUSING SCHEME AT RAWALPINDI
BILL OF QUANTITIES
MOSQUE
CIVIL WORKS

Sr. No.	Description of Items	Unit	Quantity	Unit Rate (Rs)	Amount (Rs)
31.1	Providing and laying Tuff Pavers, having 7000 PSI, crushing strength of approved manufacturer, over 2" to 3" sand cushion i/c grouting with sand in joints i/c finishing to require slope complete in all respect. 50% Grey / 50% Coloured). b) 60-mm thick	Sft	5,528.00		
31.2	Providing and laying Tuff Pavers, having 7000 PSI, crushing strength of approved manufacturer, over 2" to 3" sand cushion i/c grouting with sand in joints i/c finishing to require slope complete in all respect. 50% Grey / 50% Coloured). c) 50-mm thick	Sft	3,072.00		
32	Painting Traffic Lane Marking of specified width (1.5mm thick), with Thermoplastic (TP) Paint including Glass Beads, complete in all respect, as approved and directed by Engineer incharge. (i) 5" wide	Rft	608.00		
33	Preparing surface and painting with emulsion paint:- 3 Coats				
33.1	Ground Floor upto 20'	%Sft	316.11		
33.2	First Floor 20' to 30'	%Sft	24.58		
33.3	30' to 40'	%Sft	6.60		
33.4	40' to 50'	%Sft	6.60		
34	Providing and applying weather shield paint of approved quality on external surface of building including preparation of surface, application of primer complete in all respect:- a) new surface: i) 2 coats	%Sft	87.59		
35	P/L false ceiling comprising of 5/8" thick plaster of paris sheet of required size in approved design with one line of 6" wide niche all around , hanging with Copper wire (16 SWG) duly enriched with POP and flaxen i/c the cost of making space for rope light /screws /jute /making holes for lights and rawal plugs complete in all respects as approved and directed by the Incharge.(Measurement will be made as per carpet Area).	Sft	7,756.23		

PUNJAB GOVERNMENT
SERVANTS HOUSING SCHEME AT RAWALPINDI
BILL OF QUANTITIES
MOSQUE
CIVIL WORKS

Sr. No.	Description of Items	Unit	Quantity	Unit Rate (Rs)	Amount (Rs)
36	Providing and fitting all types of glazed aluminium windows of anodised/ powder coated partly fixed and partly sliding using delux sections of approved manufacturer having frame size of 100 x 30 mm (4"x1-1/4") and leaf frame sections of 50 x 20 mm (2"x¾"), all of 1.6mm thickness including 5 mm thick imported tinted glass with rubber gasket using approved standard latches, hardware etc., as approved by the Engineer in-charge. Providing and fixing Aluminum Fly screen comprising of Fiber / Aluminum wire guaze (Malasian) fixed in aluminum frame of approved manufacturer / powder coated of size 1-1/2"x1/2" and 1.6mm thick with rubber gasket i/c cost of Hardwares as approved and directed by the engineer incharge. complete in all respect.	Sft	481.50		
37	Providing and fixing 1st class solid wood wrought joinery in panelled or panelled and glazed doors and windows of specified thickness with 1" thick solid wood panels with stepand 1-1/2"x2-1/2" beadings all around the panels i/c the cost of Tower bolt and handles complete in all respect (Excluding the cost of sliding bolt, lock) etc., including wooden dolly Frame chowkat with Deodar Wood Cladding, as approved and directed by the Engineer Incharge. a) Deodar wood Door (i) 2" thick (50 mm)	Sft	171.50		
38	Painting new surface:- Preparing surface and painting of door and windows any type (Including edge).3 coats	%Sft	3.43		
39	P/F 3/4" dia heavy duty sliding bolt of specified material i/c the cost of hardware complete in all respect as approved and directed by the Engineer Incharge. b) Brass i) 10" (250 mm) long	Each	7.00		
40	Providing and fixing Imported Mortice Lever Handle Lock with back plate (Machine, Cylinders, Lever Handles (Pair)and back plate (Pair)) of approved quality, design & finish, including the cost of all accessories to complete the job as shown on drawing and as per specification, complete in all respect, as approved and directed by the Engineer Incharge.	Each	7.00		

PUNJAB GOVERNMENT
SERVANTS HOUSING SCHEME AT RAWALPINDI
BILL OF QUANTITIES
MOSQUE
CIVIL WORKS

Sr. No.	Description of Items	Unit	Quantity	Unit Rate (Rs)	Amount (Rs)
41	Providing and fixing 2'-9" high stair railing comprising of non magnetic (304) Stain less steel 2" dia pipe railing of 18 SWG welded with vertical posts of 2" dia stainless steel round/ Squar pipe/ Tong (chimta) @ 2-ft c/c fixed on alternate steps with 3" long steel screws and brass rawal plugs , 3-Nos diagonal stainless steel pipes of 1/2" dia passes through goties fixed on vertical post, i/c stainles steel welding, fixing & polishing complete in all respects as approved and directed by the Engineer Incharge.	Rft	167.00		
42	Providing and fixing 2" dia 18 SWG non-magnetic Stainless steel pipe (304) wall mounted hand rail comprising fixed with 2" long steel bracket with screws i/c the cost of hardware etc. & stainless steel welding & polishing complete in all respects as approved and directed by the Engineer Incharge.	Rft	279.00		
43	P/F iron grated doors comprising of 2-1/2"x2-1/2"x3/8" angle iron chowkat, 2"x2"x3/8" angle iron frame and with ¾" square bar at 4" center to center penetrate through punch holes of 2-nos 2"x3/8" MS flat horizantal bracings i/c cost of gussest plates of 3/8" MS sheet, hinges, MS Sliding Bolts and three coats of painting complete in all respect as approved and directed by the Engineer incharge.	Sft	265.00		
44	Providing and fixing M.S. grill fabricated with MS Square polished Vertical/horizontal Bars of specified size @ 4" c/c ' passed through punched holes in MS Patti of 1-1/4"x1/8" i/c the cost of 1-1/4"x1/8" MS patti for Frame of windows and painting 3 coat complete in all respect as approved and directed by the Engineer Incharge.1/2"	Sft	2,054.50		
45	Providing and fixing 1¼"x1¼"x3/16" (31x31x5 mm) angle iron step, including carriage and setting the same in work to correct lines and levels.	Each	30.00		
46	Providing and fixing 12mm Tempered Glass Door frameless comprising of aluminium H-section (D48) at bottom, H-type S.S framless handles both side (approved), top pivot hinges, bottom concealed floor machine hinges, s.s patch fitting, D glass door lock (approved) and all the cost of using approved standard fittings, accessories etc., and hardware any required, as shown on drawings, complete in all respect as per Specifications, as approved by the Engineer.	Sft	120.00		

PUNJAB GOVERNMENT
SERVANTS HOUSING SCHEME AT RAWALPINDI
BILL OF QUANTITIES
MOSQUE
CIVIL WORKS

Sr. No.	Description of Items	Unit	Quantity	Unit Rate (Rs)	Amount (Rs)
47	Providing and fixing of factory made Premium uPVC Door of ESTA, Zealcon or approved equivalent with door frame (chowkat) Comprising of 3mm (min) Wall Thickness Outer Frame 60mm X 64mm, Leaf Sash 100mm X 60 with Reinforced 1mm GI coated rust free Steel and 20mm Panel having Grooves on Both sides, weldable TPV or EPDM Gasket including hinges, T-lock, tower bolt, handle & all hardware's and necessary fittings complete in all respect as per approved specifications and as approved by the Engineer incharge.	Sft	255.50		
48	Providing and laying Premium Quality Imported, Heavy Duty Carpet Tiles with standard backing and approved color, shade, size and conforming with Radiant Panel (ASTM E648 Class 1), Smoke Density (ASTM E662), Tuft bind (ASTM D1335), AACHEN dimensional stability (ITTS 004), Electrostatic propensity (AATCC 134 < 3.5 KV), Flammability (ASTM D 2859 Pill Test), Accelerated soiling (ASTM D 6540), CRI Green Label Plus Certified (GLP1740), End Use Classification (BS EN 1307 Class 33 Heavy Commercial) etc., i/c the cost of edging & fixing etc., complete in all respect as per approved specifications and as approved by the Engineer incharge. ii Nylon Carpet Tile (100% Certified) (10mm)	Sft	2,406.09		
49	Providing and laying 3/8 inch thick superb class Multani tiles of specified size and design of approved Color and Shade with adhesive bond, over 1/2"thick (1:2) cement plaster i/c the cost of sealer for finishing the joints i/c cutting grinding complete in all respects and as approved and directed by the Engineer Incharge.	Sft	949.15		
50	Construction of Septic Tank	Each	1.00		
51	Construction of Underground Water Tank	Each	1.00		
				Total (A)	

PUNJAB GOVERNMENT
SERVANTS HOUSING SCHEME AT RAWALPINDI
BILL OF QUANTITIES
MOSQUE
CIVIL WORKS

Sr. No.	Description of Items	Unit	Quantity	Unit Rate (Rs)	Amount (Rs)
	NON-SCHEDULE ITEMS				
52	Providing and laying 3/4" (20mm) thick Sunny Grey Marble Flooring in approved 12" × 24" size, machine-cut with uniform color and texture, laid in the approved pattern over 3/4" thick cement-sand mortar (1:4), including cutting, dressing, edge finishing, joint filling with matching marble slurry, grinding, rubbing, mirror polishing, curing, and cleaning, complete in all respects as per drawings, specifications, and the approval of the Engineer-in-Charge.	Sft	3,342.87		
53	Providing and Fixing travertine marble 3/4" thick imported on façade including scaffolding as per design complete in all respects and approved by the Engineer incharge.	Sft	13,625.38		
54	Providing, fabricating and fixing Metal Jali with CNC cutting design for external façade and over windows, made of M.S. sheet 3mm thick (as approved design), laser/CNC cut as per approved architectural pattern, including M.S. frame of required size (minimum 1.5"x1.5" tube section), welding, grinding, surface preparation, anti-rust primer (red oxide/zinc chromate), and two coats of approved weather-resistant enamel paint of required colour, including all necessary supports, brackets, anchor bolts, chemical fasteners, embedding in RCC/brick masonry, scaffolding, cutting, fitting, alignment, finishing, and complete installation at all heights complete in all respects, as per drawings and as per instructions of the Engineer incharge.	Sft	2,004.91		
55	Providing and Fixing Mosque Interior & Exterior Calligraphy, ornamental works, landscaping and other Allied Works etc., as per design compete in all respects and apprvoed by the Engineer incharge.	Job	1.00		
56	Providing, fabricating and fixing wooden Khateeb seat/podium made of high-quality seasoned hardwood (Sheesham or approved equivalent), including seat platform, backrest, armrests, steps, and decorative side panels. The work shall include proper framing, joinery, carving/moulding (as per approved design), and smooth finishing with polish of approved shade, including necessary screws, nails, adhesives, and hardware, anti-termite treatment to all wooden components, cushioning with foam and upholstery, fixing in position with proper anchoring to floor complete in all respects as per drawings, approved design, and directions of the Engineer-in-Charge.	Job	1.00		
				Total (B)	
		Grand Total (A+B)			

PUNJAB GOVERNMENT
SERVANTS HOUSING SCHEME AT RAWALPINDI

BILL OF QUANTITIES

MOSQUE

PUBLIC HEALTH WORKS

Sr. No.	Description of Items	Unit	Quantity	Unit Rate (Rs)	Amount (Rs)
1	Providing, laying, testing and commissioning of POLYPROPYLENE RANDOM COPOLYMER (PPRC) water supply pipe made of (Dadex /Popular/ Beta / BBJ) with specified pressure rating PN (PRESSURE NOMINAL)and conforming to DIN 8077-8078 code i/c cost of solvent, specials, making jharriescomplete in all respect as approved and directed by Engineer In-charge.(Internal/External Diameters mentioned).PN-20 PIPE				
	(ii)(3/4") 25 mm	P/Rft	250		
	(iii)(1") 32 mm	P/Rft	140		
	(iv) (1-1/4") 40 mm	P/Rft	60		
	(iv) (1-1/2") 50 mm	P/Rft	90		
	(iv) (2") 63 mm	P/Rft	180		
	(iv) (2-1/4") 75 mm	P/Rft	30		
2	Providing, laying, cutting, jointing, testing and disinfecting PVC/ uPVC pipe line with `B' Class working pressure pipe, in trenches, complete in all respects:-				
2.1	8" i/d (200 mm	P/Rft	200		
2.2	4" i/d (100 mm)	P/Rft	160		
2.3	3" i/d (75 mm)	P/Rft	220		
3	Providing, fixing, testingandcommissioningof µ-PVC(Unplasticized polyvinyl Chloride) Nikasi/ waste pipe Fittings make of Dadex / Popular/Beta or approved equivalent manufacturer, conforming to BS 4514 / BS5255 including the cost of Solvents complete in all respect as approved and directed by the Engineer Incharge. a) P-Trap i) 4" dia	Each	10		
4	Providing and fitting one piece Europeon Coupled set of Water Closet (WC) and flushing Cistern of PORTA brand (full size) i/c the cost of CP/rubber connection, thimble, normal seat cover and rawal bolts complete in all respects as approved and directed by the Engineer Incharge. PORTA HD 102N Toilet Cito with Hydraulic Seat Cover	Each	5		
5	Providing and fitting glazed earthen ware water closet, squatter type (Orisa pattern), combined with foot rest. i) white & Providing and fitting plastic made low down flushing cistern 13.63 litre (3 gallons) capacity, including bracket set, copper connection, etc. complete. i) white	Each	5		

PUNJAB GOVERNMENT
SERVANTS HOUSING SCHEME AT RAWALPINDI

BILL OF QUANTITIES

MOSQUE

PUBLIC HEALTH WORKS

Sr. No.	Description of Items	Unit	Quantity	Unit Rate (Rs)	Amount (Rs)
8	Providing and fitting glazed earthen ware wash hand basin /vanity 56x40 cm (22"x16") including bracket set, waste pipe and waste coupling, etc. coloured, with pedestal	Each	6		
10	Providing and fixing BATHROOM ACCESSORIES (7-piece set) MASTER BRAND - One Cosmetic Shelf, One Towel rod with bracket, One soap dish, One double hook, One towel ring, brush holder, toilet paper holder & looking glass i/c the cost of hardwares etc complete in all respect as approved and directed by the Engineer incharge.				
	Plastic soap dish	Each	12		
11	Plastic toilet paper holder	Each	10		
12	Plastic tower rail	Each	8		
13	Looking glass with plastic frame	Each	6		
14	Providing and fixing glass shelf 60x13 cm (24"x5"), with 5mm thick glass: with chromium plated brackets and railing	Each	6		
15	Providing and fixing, chromium plated mixing valve, for wash hand basin/Vanity, sink or shower	Each	39		
16	Providing and fixing CP bath Room Set made of Sonex /Master/Faisal comprising of 3-No Tee stop cocks, lever type Basin Mixer, double Bib Cock, open wall shower, Muslim shower,waste coupling and bottle trap etc. complete in all respect as approved and directed by the Engineer incharge				
a	3 No Tee Stop Cock	Each	88		
c	Double Bib Cock	Each	10		
d	Open Type Wall Shower	Each	2		
e	Muslim shower	Each	10		
f	waste Coupling	Each	6		
g	Bottle Trap	Each	6		
17	Providing/fixing Electric water heater (Geyser) comprising of tank of 14 SWG, GI sheet and external cover of 22 SWG MS sheet, insulated with 4" thick high density glass wool, imported thermostat i/c electric rod, safety valve (Ambassador / Canon) i/c cost of accessories & making connection complete in all respect as approved and directed by Engineer Incharge. 20 Gallon Capacity.	Each	4		

PUNJAB GOVERNMENT
SERVANTS HOUSING SCHEME AT RAWALPINDI
BILL OF QUANTITIES
MOSQUE
PUBLIC HEALTH WORKS

Sr. No.	Description of Items	Unit	Quantity	Unit Rate (Rs)	Amount (Rs)
18	Providing and fixing heavy duty Gate valve of specified diameter and material for pressure rating PN-16 mde of Crane (USA), Hatersly (UK) or Scon (Pakistan) i/c the cost of all accessories flanges,nut/bolt and gaskit where required complete in all respect as approved and directed by the Engineer Incharge.				
18.1	2-1/2"	Each	6		
19	Providing, fixing, testingandcommissioningof µ-PVC(Unplasticized polyvinyl Chloride) Nikasi/ waste pipe Fittings make of Dadex / Popular/Beta or approved equivalent manufacturer, conforming to BS 4514 / BS5255 including the cost of Solvents complete in all respect as approved and directed by the Engineer Incharge. b) Multi-Trap ii) 3" dia	Each	33		
20	Providing and hoisting vertical/ horizontal type storage tank of required capacity made of rotationally molded from (HDPE), double ply polyethelene of approved manufacturer i/c cost of making connection for inlet/outlet pipe, float valve i/c all cost of specials& labour complete in all respect as approved and directed by the Engineer Incharge	Gallon	1000		
21	P/F Ejector Pump of specified Suction and Delivery heads,coupled with Single Phase Seimen Electric Motor of required rating for water supply i/c the cost of connection charges, necessary wire, PVC pipes etc complete in all respect as approved and directed by the Engineer Incharge.(G-IV (2-1/2"x2") with 2.5 HP Electric Motor, 38-Mtr Suction and 38 M delivery head)	Each	1		
22	Constructing gully grating chamber, 12"x12" (300x300mm) complete in all respects: a) with C.I. gully trap, weighing 81 lbs. (36.75 Kg.) frame hinged safety type.	Each	4		
23	Construction of manhole 5' deep as per design complete in all respects and approved by the engineer incharge.	Each	4		
24	Construction of recharge well for ablution water as per design complete in all respects and approved by the engineer incharge.	Each	1		
				Total	

PUNJAB GOVERNMENT
SERVANTS HOUSING SCHEME AT RAWALPINDI

BILL OF QUANTITIES

MOSQUE

SEPTIC TANK

Sr. No.	Description of Items	Unit	Quantity	Unit Rate (Rs)	Amount (Rs)
1	Earth work excavation in open cutting for water supply lines, sewers and manholes including backfilling, shuttering of wooden vertical planks, struts and beams, dressing to correct section and dimension according to templates and levels and removing surface water i/c back filling in all types of soil except shingle, gravel and rock, complete in all respect.	%0Cft	0.53		
2	PCC Concrete 1:4:8	%Cft	0.17		
3	Providing ,laying,compacting and curing pre-mixed Cement Concrete of specified strength by using OP Cement of specified ratio including screening washing of aggregate ;mixing of constituents by using batching plant,transported by transit mixer and pouring with pumps,with specified consistency i/c the cost of shuttering, compaction with Viberator but excluding, the cost of Admixture, as approved and directed by the Engineer Incharge.(c) Substructure without shuttering (Foundations,Raft,Strip and Footing Beams and other structural members not mentioned above in 8(a) &(b).1:1.5:3	Cft	39.41		
4	Placing, compacting, finishing and curing of concrete using Ordinary Portland Cement / Sulphate resisting cement / Slag cement as may be required; including screening, washing of aggregates and mixing of constituents using batching plant, admixture, Transportation by transit mixer, pouring with pump in the required proportions to achieve a nominal cylindrical strength in the field as per ACI 214, with the specified consistency. i/c the cost of shuttering, compaction with Viberator, cost of Admixture, as approved and directed by the Engineer Incharge.Shear Wall 9" thick.	Cft	186.53		

PUNJAB GOVERNMENT
SERVANTS HOUSING SCHEME AT RAWALPINDI

BILL OF QUANTITIES

MOSQUE

SEPTIC TANK

Sr. No.	Description of Items	Unit	Quantity	Unit Rate (Rs)	Amount (Rs)
5	Providing ,laying,compacting and curing pre-mixed Cement Concrete of specified strength by using OP Cement of specified ratio including screening washing of aggregate ;mixing of constituents by using batching plant,transported by transit mixer and pouring with pumps,with specified consistency i/c the cost of shuttering, compaction with Viberator but excluding, the cost of Admixture, as approved and directed by the Engineer Incharge.(a) Superstructure (Slabs,beams,Columns, lintels, girders and prestressed members others cast in situ requiring formwork).1:1.5:3	Cft	26.27		
6	Fabrication of mild steel reinforcement for cement concrete, including cutting, bending, laying in position on, making joints and fastenings, including cost of binding wire and labour charges for binding of steel reinforcement (also includes removal of rust from bars): Grade 60	%Kg	11.44		
7	Providing and applying torch-on plain waterproofing bitumenous membrane of specified thickness (made of Roof-Grip/ Euro Bit) duly lapped/connected by heating with Torch over ps-6 primer i/c preparation/smoothen the surface complete in all respect as approved and directed by the Engineer Incharge. 4mm	Sft	293.31		
8	1½"(40 mm) thick mosaic flooring, consisting of ½ "(13 mm) mosaic topping of one part of cement and marble powder in the ratio of 3:1 and two parts of marble chips laid over 1"(25 mm) thick floor of 1:2:4 cement concrete, including rubbing and polishing complete with finishing :- With Grey Cement	%Sft	0.53		
9	Mosaic dado or skirting with one part of cement and marble powder in the ratio of 3:1 and two parts of marble chips, laid over ½"(13 mm) thick cement plaster 1:3, including rubbing and polishing, complete with finishing: With Grey Cement	%Sft	3.24		

PUNJAB GOVERNMENT
SERVANTS HOUSING SCHEME AT RAWALPINDI

BILL OF QUANTITIES

MOSQUE

SEPTIC TANK

Sr. No.	Description of Items	Unit	Quantity	Unit Rate (Rs)	Amount (Rs)
10	Providing and fixing 6" thick R.C.C. manhole cover with tee shaped C.I. frame of 22" I/d (frame weighing 37.324 Kg. or one maund as per Standard Drawing STD/PD No. 6, of 1977, complete in all respect	Per Set	2.00		
11	Providing and embedding 10" (250mm) wide PVC water stopper in expansion joints of RCC structures (Retaining walls, water tanks, Slabs) complete in all respect.	Per Rft	60.00		
12	Providing, laying, cutting, jointing, testing and disinfecting PVC/ uPVC pipe line with `B' Class working pressure pipe, in trenches, complete in all respects:- e) 8" i/d (200 mm)	Per Rft	30.00		
				Total	

PUNJAB GOVERNMENT
SERVANTS HOUSING SCHEME AT RAWALPINDI

BILL OF QUANTITIES

MOSQUE

UNDERGROUND WATER TANK

Sr. No.	Description of Items	Unit	Quantity	Unit Rate (Rs)	Amount (Rs)
1	Earth work excavation in open cutting for water supply lines, sewers and manholes including backfilling, shuttering of wooden vertical planks, struts and beams, dressing to correct section and dimension according to templates and levels and removing surface water i/c back filling in all types of soil except shingle, gravel and rock, complete in all respect.	%0Cft	0.61		
2	PCC Concrete 1:4:8	%Cft	0.31		
3	Providing ,laying,compacting and curing pre-mixed Cement Concrete of specified strength by using OP Cement of specified ratio including screening washing of aggregate ;mixing of constituents by using batching plant,transported by transit mixer and pouring with pumps,with specified consistency i/c the cost of shuttering, compaction with Viberator but excluding, the cost of Admixture, as approved and directed by the Engineer Incharge.(c) Substructure without shuttering (Foundations,Raft,Strip and Footing Beams and other structural members not mentioned above in 8(a) &(b).1:1.5:3	Cft	40.50		
4	Placing, compacting, finishing and curing of concrete using Ordinary Portland Cement / Sulphate resisting cement / Slag cement as may be required; including screening, washing of aggregates and mixing of constituents using batching plant, admixture, Transportation by transit mixer, pouring with pump in the required proportions to achieve a nominal cylindrical strength in the field as per ACI 214, with the specified consistency. i/c the cost of shuttering, compaction with Viberator, cost of Admixture, as approved and directed by the Engineer Incharge.Shear Wall 9" thick	Cft	99.11		

PUNJAB GOVERNMENT
SERVANTS HOUSING SCHEME AT RAWALPINDI

BILL OF QUANTITIES

MOSQUE

UNDERGROUND WATER TANK

Sr. No.	Description of Items	Unit	Quantity	Unit Rate (Rs)	Amount (Rs)
5	Providing ,laying,compacting and curing pre-mixed Cement Concrete of specified strength by using OP Cement of specified ratio including screening washing of aggregate ;mixing of constituents by using batching plant,transported by transit mixer and pouring with pumps,with specified consistency i/c the cost of shuttering, compaction with Viberator but excluding, the cost of Admixture, as approved and directed by the Engineer Incharge.(a) Superstructure (Slabs,beams,Columns, lintels, girders and prestressed members others cast in situ requiring formwork).1:1.5:3	Cft	40.50		
6	Fabrication of mild steel reinforcement for cement concrete, including cutting, bending, laying in position on, making joints and fastenings, including cost of binding wire and labour charges for binding of steel reinforcement (also includes removal of rust from bars): Grade 60	%Kg	8.40		
7	Providing and applying torch-on plain waterproofing bitumenous membrane of specified thickness (made of Roof-Grip/ Euro Bit) duly lapped/connected by heating with Torch over ps-6 primer i/c preparation/smoothen the surface complete in all respect as approved and directed by the Engineer Incharge. 4mm	Sft	216.00		
8	1½"(40 mm) thick mosaic flooring, consisting of ½ "(13 mm) mosaic topping of one part of cement and marble powder in the ratio of 3:1 and two parts of marble chips laid over 1"(25 mm) thick floor of 1:2:4 cement concrete, including rubbing and polishing complete with finishing :- With Grey Cement	%Sft	0.81		

PUNJAB GOVERNMENT
SERVANTS HOUSING SCHEME AT RAWALPINDI

BILL OF QUANTITIES

MOSQUE

UNDERGROUND WATER TANK

Sr. No.	Description of Items	Unit	Quantity	Unit Rate (Rs)	Amount (Rs)
9	Mosaic dado or skirting with one part of cement and marble powder in the ratio of 3:1 and two parts of marble chips, laid over ½"(13 mm) thick cement plaster 1:3, including rubbing and polishing, complete with finishing: With Grey Cement	%Sft	1.98		
10	Providing and fixing 6" thick R.C.C. manhole cover with tee shaped C.I. frame of 22" I/d (frame weighing 37.324 Kg. or one maund as per Standard Drawing STD/PD No. 6, of 1977, complete in all respect	Per Set	1.00		
11	Providing and embedding 10" (250mm) wide PVC water stopper in expansion joints of RCC structures (Retaining walls, water tanks, Slabs) complete in all respect.	Per Rft	366.00		
12	Providing, laying, cutting, jointing, testing and disinfecting PVC/ uPVC pipe line with `B' Class working pressure pipe, in trenches, complete in all respects:- e) 8" i/d (200 mm)	Per Rft	20.00		
				Total	

ESTABLISHMENT OF PUNJAB GOVERNMENT SERVANTS HOUSING SCHEME AT RAWALPINDI
JAMIA MASJID
ELECTRICAL WORKS
BILL OF QUANTITIES
SUMMARY

S.#	Description (MRS Items)	Amount (Rs)
1	Part - 1 - LT Panels & Sub Main Panel	
2	Part - 2 - Distribution Boards	
3	Part - 3 - Wiring	
4	Part - 4 - Electrical Fittings & Fixtures	
5	Part - 5 - L.T Cables & Cable Trays	
6	Part - 6 - Transformer	
7	Part - 7 - Solar system	
8	Part - 8 - CCTV	
9	Part - 9 - Sound System	
Total Cost (MRS Items)		
S.#	**Description (Non-MRS Items)**	**Amount (Rs)**
10	Part - 4 - Electrical Fittings & Fixtures (Non-MRS)	
11	Part - 6 - Earthing Systems (Non-MRS)	
Total Cost (Non-MRS Items)		
Total Cost (MRS and Non-MRS Items)		

ESTABLISHMENT OF PUNJAB GOVERNMENT SERVANTS HOUSING SCHEME AT RAWALPINDI
JAMIA MASJID
ELECTRICAL WORKS
L.T. SWITCHGEAR

Item No.		Unit	Qty.	Unit Rate (Rs)	Amount (Rs)
1	**Main Panel Board (MPB)**				
	P/F floor mounted Electric Panel board of 2.5 ft deep, fabricarted with 14 SWG M.S sheet (Indoor/Outdoor Type), derusting, Zinc Phosphated, finish with electrostatic powder coating in approved colour i/c the cost of Lock, Indication lights, Brass glands, Netural & Earth bar, Digital volt meter / Amp meter, Selector switchs, Current Transformers, Controles, Channels, Copper bus bars of (40 x 5 mm), Door Earthing, complete in all respects as approved and directed by the Engineer Incharge.	Job	1		
	Incoming				
	1 x 100 Amp. (adjust.) TP, MCCB, 36 kA at 415V. (Icu=Ics=100%) (Schneider/ABB)				
	1 x 3-Phase SPD (Surge Suppressors.) of Type-1, 40 kA, 10 kV (Phoenix / GA&DA)				
	230 Volts robust exhaust fan along with thermostat ON/OFF switch, air filters and all accessories complete in all respects (Imported)				
	3 x 6A MCB SP 10 kA Control Breakers (Schneider/ABB)				
	Outgoing				
	2 x 63 Amp. TP, MCCB, 15 kA at 415V. (Schneider/ABB)				
	4 x 10 Amp. TP, MCB, 10 kA at 415V. (Schneider/ABB)				
2	P/F floor mounted ATS (Auto Transfer Switch) panel board for 50 kVA Generator Set, fabricarted with 14 SWG M.S sheet (Indoor Type) duly painted with 100 microns powder coated paint in approved colour, front access, extendable, insulation class of 600 volts IP-44, incoming & outgoing connections from bottom with flexible copper cable suitable for 415 VAC, 3-phase 4 wire, 50 HZ TPN & E system having rated service, short circuit breaking capacity at 400VAC conforming to IEC-947-2 to accomodate given no of circuit components, instruments & accessories, assembled & wired with Electrolitic Copper bus bars at 50 deg and cables duly cleaned down to bare shining metal phosphate, manual change Over i/c the cost of Lock, Indication lights, Brass glands, Netural & Earth bar, thimbles, Digital volt meter / Amp meter, Select or switch, Current transformers, Controles, Channels, Copper bus bars of specified capacity, Relays, Door Earthing, complete in all respects as approved and directed by the Engineer Incharge.	Each	1		
	Total				

ESTABLISHMENT OF PUNJAB GOVERNMENT SERVANTS HOUSING SCHEME AT RAWALPINDI
JAMIA MASJID
ELECTRICAL WORKS
DISTRIBUTION BOARDS

Item No.	Description	Unit	Qty.	Unit Rate (Rs)	Amount (Rs)
1	**LPDB**				
	P/F wall mounted DB (Distribution Board) made with 16 SWG Sheet (Recessded / Surface mounted Type), Powder coated Paint, i/c the cost of Lock, Indication lights,Thimble, Copper Comb, Wiring, Netural & Earth Bar, Door Earthing, Digital Voltmeter, Digital Ammeter, Volt Selector Switch, Ammeter selector switch, Current Transformers and Controles Complete in all respect as approved and directed by the Engineer Incharge.	Job	2		
	Incoming				
	2 x 63 Amp. TP, MCCB, 15 kA at 415V. (Schneider/ABB)				
	3 x 6A MCB SP 10 kA Control Breakers (Schneider/ABB)				
	Outgoing				
	12 x 10 Amps SP, MCB, 10 kA.(Schneider/ABB/Himel)				
	9 x 20 Amps SP, MCB, 10 kA.(Schneider/ABB/Himel)				
	Total				

ESTABLISHMENT OF PUNJAB GOVERNMENT SERVANTS HOUSING SCHEME AT RAWALPINDI
JAMIA MASJID
ELECTRICAL WORKS
INTERNAL WIRING

Sr. No.	Description	Unit	Qty.	Rate (Rs.)	Amount (Rs.)
1.0	**WIRING, PIPES AND ACCESSORIES**				
1.1	Circuit wiring from Distribution board to Gang Switch Board or Dimmer Board main circuit with 2x2.5 mm2 CU/PVC insulated single core cable and 1x2.5 mm2 CU/PVC single core as ECC in PVC conduit/pipes of dia 25mm including pull boxes, bends, saddle along with all accessories as per the specifications approved by the Engineer's Representative.	Job	24		
1.2	Point wiring for light / fan from Gang Switch Board / Dimmer Board to first light / fan with 2x2.5 mm2 CU/PVC insulated single core cable and 1x2.5 mm2 CU/PVC single core as ECC in PVC conduit / pipes of dia 25mm including pull boxes, bends, saddle along with 1 or 2 way ON/OFF Switch and all required accessories as per the specifications approved by the Engineer's Representative.	Job	80		
1.3	Point wiring from first light / fan to second light / fan (point to point wiring) with 2x1.5 mm2 CU/PVC insulated single core cable and 1x1.5 mm2 CU/PVC single core as ECC in 25mm PVC conduit / pipes including pull boxes, bends, saddle along with all accessories as per the specifications approved by the Engineer's Representative.	Job	110		
1.4	Circuit wiring from Distribution board to 13A / 20A Power / light plug main circuit with 2x4 mm2 CU/PVC insulated single core cable and 1x4 mm2 CU/PVC single core as ECC in PVC 25mm conduit/pipes including pull boxes, bends, saddle along with all accessories. Cost of Light / Power Plug is included as per the specifications approved by the Engineer's Representative (Consultant).	Job	18		

1.5	Point wiring from one light plug to next light plug (point to point wiring) with 2x4 mm2 CU/PVC insulated single core cable and 1x4 mm2 CU/PVC single core as ECC in PVC 25mm conduit/pipes including pull boxes, bends, saddle along with all accessories. Cost of Light / Power Plug is included as per the specifications approved by the Engineer's Representative.	Job	50		
	TOTAL				

ESTABLISHMENT OF PUNJAB GOVERNMENT SERVANTS HOUSING SCHEME AT RAWALPINDI
JAMIA MASJID
ELECTRICAL WORKS
ELECTRICAL FITTINGS AND FIXTURES

Item No.	Description	Unit	Qty.	Unit Rate (Rs)	Amount (Rs)
1	**LED Fittings**				
	Supply at site, Installation, testing and commissioning of the following LED light along with drivers, fittings, ceiling, wall mounted or as shown on drawings, to be manufactured by any well reputed Light manufacturers, including cost of all necessary accessories and materials, complete in all respects. LED lights shall be suiable for wattage as shown below, all LED lights shall be suitable for PF=0.95, CRI = 80 & 6500 K, life shall be about 30,000 hours as per the specifications approved by the Engineer's Incharge.				
a	6" dia. LED recessed down light fixture 12 W. LED type: 6500 K, CRI=80, PF=0.9. as per the specifications approved by the Engineer's Incharge.	Nos.	229		
b	Wall Mounted LED light fixture 18 W. LED type: 6500 K, CRI=80, PF=0.9. as per the specifications approved by the Engineer's Incharge.	Nos.	12		
c	Water Tight LED light fixture 18 W. LED type: 6500 K, CRI=80, PF=0.9. as per the specifications approved by the Engineer's Incharge.	Nos.	14		
d	Large Crystal Mosque Chandelier	Nos.	1		
2	**Air Conditioner (AC)**				
	Supply, installation, testing, and commissioning of a 4.0-ton capacity split air conditioner (AC) (Floor Standing) with indoor and outdoor unit, including all necessary materials and accessories.	Nos.	2		
	Supply, installation, testing, and commissioning of a 2.0-ton capacity split air conditioner (AC) (wall mount) with indoor and outdoor unit, including all necessary materials and accessories.	Nos.	2		
	Total				
3	**Ceiling Fans**				
	Providing and fixing Pakistan Energy Label NEECA approved Copper winded 56" Ceiling Fan i/c the cost of necessary cable and hardware for connection as approved and directed by Engineer Incharge.	Nos.	29		
4	**Exhaust Fans**				
	Providing and fixing Pakistan Energy Label NEECA approved 12 " dia Plastic Body, Copper winded Exaust Fan i/c the cost of necessary cable and hardware for connection from ceiling rose complete as approved and directed by Engineer Incharge.	Nos.	7		
5	**Wall Bracket Fan**				
	Providing and fixing Pakistan Energy Label NEECA approved 24" dia Copper winded wall bracket Fan i/c the cost of necessary cable and hardware for connection as approved and directed by Engineer Incharge.	Nos.	4		
	Total				

ESTABLISHMENT OF PUNJAB GOVERNMENT SERVANTS HOUSING SCHEME AT RAWALPINDI
JAMIA MASJID
ELECTRICAL WORKS
LT CABLES

Item No.	Description	Unit	Qty.	Unit Rate (Rs)	Amount (Rs)
1	**L.T. Power Cables**				
	Supply at site, installation, testing and commissioning of PVC insulated PVC sheathed non armoured copper conductor power cable 600 / 1000 Volt grade in preinstalled cable tray / trenches. Cables to be installed as per routes shown on drawings including cost of all necessary materials, connections of cables and identification tags at both ends, cables lugs properly crimped at both ends for the following sizes complete in all respects. Actual length of cables to be installed shall be practically measured at site by the Contractor, duly authenticated by the employers electrical engineer before placing the order with the manufacturer. Payments shall be made as per actual length installed as per the specifications approved by the Engineer's Incharge.				
a)	**4 Core Cable PVC/PVC (600/1000V)**				
i.	4 core 50 mm.sq. (From Transformer to ATS, DG Set to ATS and ATS to MPB)	mtr	150		
ii.	4 core 16 mm.sq. (From MPB to LPDBs)	mtr	50		
iii.	4 core 2.5 mm.sq. (From MPB to Floor Standing Acs)	mtr	45		
b)	**Circuit Protective Conductor (CPC) (450/750V)**				
i.	1 core 25 mm sq. PVC insulated colour Green/Yellow.	mtr	150		
ii.	1 core 16 mm sq. PVC insulated colour Green/Yellow.	mtr	50		
iii.	1 core 2.5 mm sq. PVC insulated colour Green/Yellow.	mtr	45		
2	**G.I Cable Trays & Ladder as per the specifications approved by the Engineer's Incharge.**				
i.	Providing and fixing of 12"x4" cable tray with straight flange fabricated with perforated G.I. Sheet of 14 SWG, size and depth duly supported on painted brackets of MS angle iron of 1-1/2"x1-1/2"x3/16" and MS patti of 11/2"x3/16" size @ 3 ft C/C, hangers i/c the cost of hardwares as approved and directed by the Engineer Incharge.	Mtr	20		
	Total				

ESTABLISHMENT OF PUNJAB GOVERNMENT SERVANTS HOUSING SCHEME AT RAWALPINDI
JAMIA MASJID
ELECTRICAL WORKS
TRANSFORMERS

Item No.	Description	Unit	Qty.	Unit Rate (Rs)	Amount (Rs)
1	**TRANSFORMER**				
i.	Supply, insatllation, commissioning and testing of oil cooled type, Step down Power Transformer pole mounted of 50 kVA,11/0.415 kV, i/c the cost of lifting hooks, thermometers, LT & HT bushing 5-steps, tap changer, imported double float buchholz relay, 2 earthing terminals, roller wheels, connecting terminals for cables M.S box on transformer in order to cover complete L.T side, all necessary materials required for connections on H.T & L.T side, rated voltage 11000/415/240 V, 4% impedance as specified by WAPDA/IEC system earth: Delta / Star, neutral solidly earthed, i/c Wapda testing charges, complete in all respects made of PEL, Siemens, Transfopower, Elmetec or as approved and directed by the Engineer Incharge.	Job.	1		
	Total				

ESTABLISHMENT OF PUNJAB GOVERNMENT SERVANTS HOUSING SCHEME AT RAWALPINDI
JAMIA MASJID
ELECTRICAL WORKS
EARTHING SYSTEM

Item No.	Description	Unit	Qty.	Unit Rate (Rs)	Amount (Rs)
1	Drilling of earth bore (dia depends on soil resistivity of area) 10 to 12 ft. deep. Earthing bores shall be made at 10ft. away from foundation and distance between earth bore shall not be less than 10ft as per the specifications approved by the Engineer's Representative. Supply & Installation of Copper Earth Termination Rod along with all accessories and fittings. Surrounding filled with Permanent Mineral Based Compound. Size : Rod Diameter 16 (mm), length 3000 mm Material: 99.9% High Conductivity Hard Drawn Copper Supply & Installation of Connection plate along with all accessories for connection to copper tape to ground copper rod. Plate Size : 50mm x 200mm x 10mm Material Copper M10 holes 5 x No's Supply and purring of PMC (Permanent Mineral Compound) chemical to achieve the Earthing Value less than 01 ohm Construction of Concrete inspection Pit with sealing arrangement and cover, along with all accessories for risers of underground stranded conductor as per Drawing. Size : 600mm x 600mm x 600mm Testing & Commissioning of complete system.	Job.	5		
	Total				

Bill of Quantities						
ESTABLISHMENT OF PUNJAB GOVERNMENT SERVANTS HOUSING SCHEME AT RAWALPINDI						
JAMIA MASJID						
10KW Hybrid Solar System						
Sr. No.	**Items**	**Description**	**Unit**	**Quantity**	**Cost/Unit**	**Total cost**
1	Solar Panels	JA 715 Watt N type Topcon Monocrystalline Bifacial. 1500 V rated.	No.	16		
2	Hybrid Inverters	SG150CX, 10KW multi mppt string Inverter 400V rated.	No.	1		
3	Batteries and communication board	16 kWh Lithium Iron Phosphate ($LiFePO_4$) Battery	nos.	2		
6	DC Circuit Breakers	NB1-63DC, 32Amp, 4P, 1000V rated	No.	2		
7	Structure Supply and Installation	Ground Mounted, P1 rail type Anodized Aluminum structure. Wind Speed 150km/h, SS accessories nut, screws and bolts.	No.	18		
8	civil work	PCC 1:2:4 concrete pad 1.5x1.5x1.5 ft PSI 3000	No.	101.25		
10	DC Cable	6 sq.mm, flexible, XLPO/XLPO, single core double insulated cable rated at 1500VDC. Tinned Copper with UV protection. Vermin resistant	Meters	75		
11	AC Cable (inverter to LV)	50 sqmm, 4 core, unarmored, Copper, PVC Insulated. Rated 600V to 1000V.	Meters	50		
14	Grounding cable (Panels)	Single Core, flexible 2.5 sq. mm ,0.6/1KV CU/PVC	Meters	400		
15	Grounding Cable for Structures	Green Color Single Core flexible, 6 sq.mm, 0.6/1KV CU/PVC	Meters	400		
16	Grounding Cable for lighting arrestor	Green Color Single Core flexible, 16 sq.mm, 0.6/1KV CU/PVC	Meters	100		
17	Grounding Cable for Inverters	Green Color Single Core Stranded 50 sq.mm, 0.6/1kV CU/PVC	Meters	100		
19	Communication cable	CAT-6	Meters	90		
20	Bore Type Earthing	Bore type earthing point by drilling 3" dia bore holeup towater table/moist soil by laying2"dia perforated GI.pipe(MediumQuality)fixed with 40mm dia and 250mm long tinned copper spike at bottom, i/c the cost of Tinned earth test link copper plate(300x50x10mm), brassnuts, spacers,bolts washerslugs etc but excluding the cost of copper strand&manhole. as approved and directed by Engineer Incharge	Meters	4		
21	Lightening Arrestors	Lightening arrestor copper clad rod 1 meter with GI pole 3 meter have PCC Foundation.	No.	1		
24	GI Cable Tray(6"x3")	450mm X 150mm GI Cable Tray 16SWG Perforated with cover, joining plates and wall mount clamps (Inverter room)	feet	100		
28	MC4 Connectors	MC4 Pair (Male/Female) Connectors for strings. IP 68 connectors	No.	8		
	Total Cost of project					

ESTABLISHMENT OF PUNJAB GOVERNMENT SERVANTS HOUSING SCHEME AT RAWALPINDI
JAMIA MASJID
ELECTRICAL WORKS
CCTV SYSTEM

Item No.	Description	Unit	Qty.	Unit Rate (Rs)	Amount (Rs)
	Supply, transportation, storage, installation, testing and commissioning of the following items of work (unless specifically stated otherwise) including all material, labour, tools, accessories, foundations civil works cable trenches and earthing etc. required for proper completion of each item as per the specifications approved by the Engineer's Incharge.				
1.	**NVR**				
i.	Supply & Installation of NVR (Network Video Recorder) for Real Time View of 16 Channels, video and Audio channels,Supported protocoles: ONVIF, RTSP etc, Internal HDDs mount support:2/4/8 or higher as per site requirement, Monitor outputs, (HDMI,4K Ultra HD), VGA (Video Graphic array), Support Raid 5/6, Embeded OS, Data Encryption, Min. 1 x RJ-45 1000Mbps Ports, with PC Video Monitoring Software, Web Server, Embedded Server complete in all respect. made of AXIS Europe/NOVAS Europe/Avigilon by Motrola USA /Huawei, Pollo Australia or equivalent approved manufacturer and directed by the Engineer Incharge.	No.	1		
2.	**Hard Drive**				
i.	Supply, Installation and Connection of Surveillance Grade Hard Drives (HDD) of 10 Capacity for CCTV System Backup. made of Seagate / WD, Pollo Australia or equivalent approved manufacturer and directed by Engineer Incharge.	No.	2		
3	**IP Based CCTV Dome Camera**				
i.	Supply, installation & connecting IP based Camera of 4 MP resolution, lens, motorized, auto-iris and auto-focus function, f=2.8~12 mm,human/vehicle object classification ,D/N function-IR cut filter,Video content analysis based on Deep learning,micro SD card support,WDR with double scan sensor, Min, illumination: 0.007 lx(01xIR on),IR LED,range upto 50 m, i/c the cost of mounting bracket, accessories, made of AXIS Europe / NOVAS Europe / Avigilon by Motorla USA / Bosch Germany, Pollo Australia or equivalent, as approved as directed by the Engineer Incharge.	No.	5		
4	**IP Based CCTV Bullet Camera**				
i.	Supply, installation & connecting IP based Camera of 4 MP resolution, lens, motorized, auto-iris and auto-focus function, f=2.8~12 mm,human/vehicle object classification ,D/N function-IR cut filter,Video content analysis based on Deep learning,micro SD card support,WDR with double scan sensor, Min, illumination: 0.007 lx(01xIR on),IR LED,range upto 50 m, i/c the cost of mounting bracket, accessories, made of AXIS Europe / NOVAS Europe / Avigilon by Motorla USA / Bosch Germany, Pollo Australia or equivalent, as approved as directed by the Engineer Incharge.	No.	2		
6	**CAT-6 Cable**				
i.	Supply, Installation and commissioning of wiring with 4-pair data Cable of CAT-6A, UL/EN listed cable, Conforming to following standards: TIA/EIA 568 / ISO/IEC 11801, in prelaid conduit / cable tray from including all accessories, Manufacturer / OEM Authorization, Make Schneider / i-connect UK/3M Corning USA/ or equivalent approved manufacturer, complete in all respect as approved and directed by Engineer Incharge (i)CAT-6A (Min.1G/ 10G @ 500MHz or higher)	Mtr	400		
7	**LED Screen**				
i.	40" Smart LED Screen fro CCTV Monitoring	Job	1		
				Total Cost	

ESTABLISHMENT OF PUNJAB GOVERNMENT SERVANTS HOUSING SCHEME AT RAWALPINDI
JAMIA MASJID
ELECTRICAL WORKS
PUBLIC ADDRESS SYSTEM

Item No.	Description	Unit	Qty.	Unit Rate (Rs)	Amount (Rs)
	Supply, transportation, storage, installation, testing and commissioning of the following items of work (unless specifically stated otherwise) including all material, labour, tools, accessories, foundations civil works cable trenches and earthing etc. required for proper completion of each item as per the specifications approved by the Engineer's Incharge.				
1.	**Column Type Speaker**				
i.	Supply, Installation & Commissioning of recessed / surface mounted Speakers of 20 watt housed in metalic enclosure with built in 70v/100v transformer , aluminium grill, SPL (Sound Pressure Level) (1W / 1M)= 92dB max 99dB, frequency response 130-13 Khz, EN-54 compliant, Including cost of all accessories and matierlas, complete in all respect made of Ecler Europe/Bosch/ Norden / Honey Well or equivalent as approved and directed by the Engineer Incharge	No.	8.00		
ii.	Supply, Installation & Commissioning of recessed / surface mounted Speakers of 60 watt housed in metalic enclosure with built in 70v/100v transformer , aluminium grill, SPL (Sound Pressure Level) (1W / 1M)= 92dB max 99dB, frequency response 130-13 Khz, EN-54 compliant, Including cost of all accessories and matierlas, complete in all respect made of Ecler Europe/Bosch/ Norden / Honey Well or equivalent as approved and directed by the Engineer Incharge	No.	2.00		
2	**Power Amplifier**				
i.	Supply, Installation and commissioning of Power / Mixer Amplifier of 160 Watt, Including cost of all necessary accessories / materials, Supply, Installation and commissioning of Power / Mixer Amplifier of complete in all respects made of Ecler Europe / Bosch / Norden / Honey Well or Equivalent or as approved and directed by Engineer Incharge	No.	1.00		
ii.	Supply, Installation and commissioning of Power / Mixer Amplifier of 240 Watt, Including cost of all necessary accessories / materials, Supply, Installation and commissioning of Power / Mixer Amplifier of complete in all respects made of Ecler Europe / Bosch / Norden / Honey Well or Equivalent or as approved and directed by Engineer Incharge	No.	1.00		
3	**Wireless Handheld Microphone**				
i.	Supply, Installation of Microphone of Handheld Microphone with Stand as per requirement made of : Norden, Bosch, Honeywell. Complete in all respect. as approved and directed by Engineer Incharge.	Job	1.00		
ii.	Supply, Installation of Microphone of Headset Condensor Microphone as per requirement made of : Norden, Bosch, Honeywell. Complete in all respect. as approved and directed by Engineer Incharge.	Job	1.00		
4	**Cable**				
i.	Supply, Installation and commissioning of wiring with 2 Core 1.5mm Sqr Fire Resistant Shielded Cable (Fire Rating for 2 hours) from Amplifier to devices including conduit as approved and directed by the Engineer Incharge.	Rm	500.00		
				Total Cost	

ESTABLISHMENT OF PUNJAB GOVERNMENT SERVANTS HOUSING SCHEME AT RAWALPINDI.

MOSQUE DRAWINGS

(APRIL, 2026)

CLIENT:

PUNJAB GOVERNMENT SERVANTS HOUSING FOUNDATION

CONSULTANT:

HA CONSULTING
ARCHITECTS, ENGINEERS & PLANNERS

Address: H # 10-Block D2, First Floor
Johar Town, Lahore, Pakistan.
Tel: +92 42 35182103-4
Email: info@haconsulting.co
Web: www.haconsulting.co

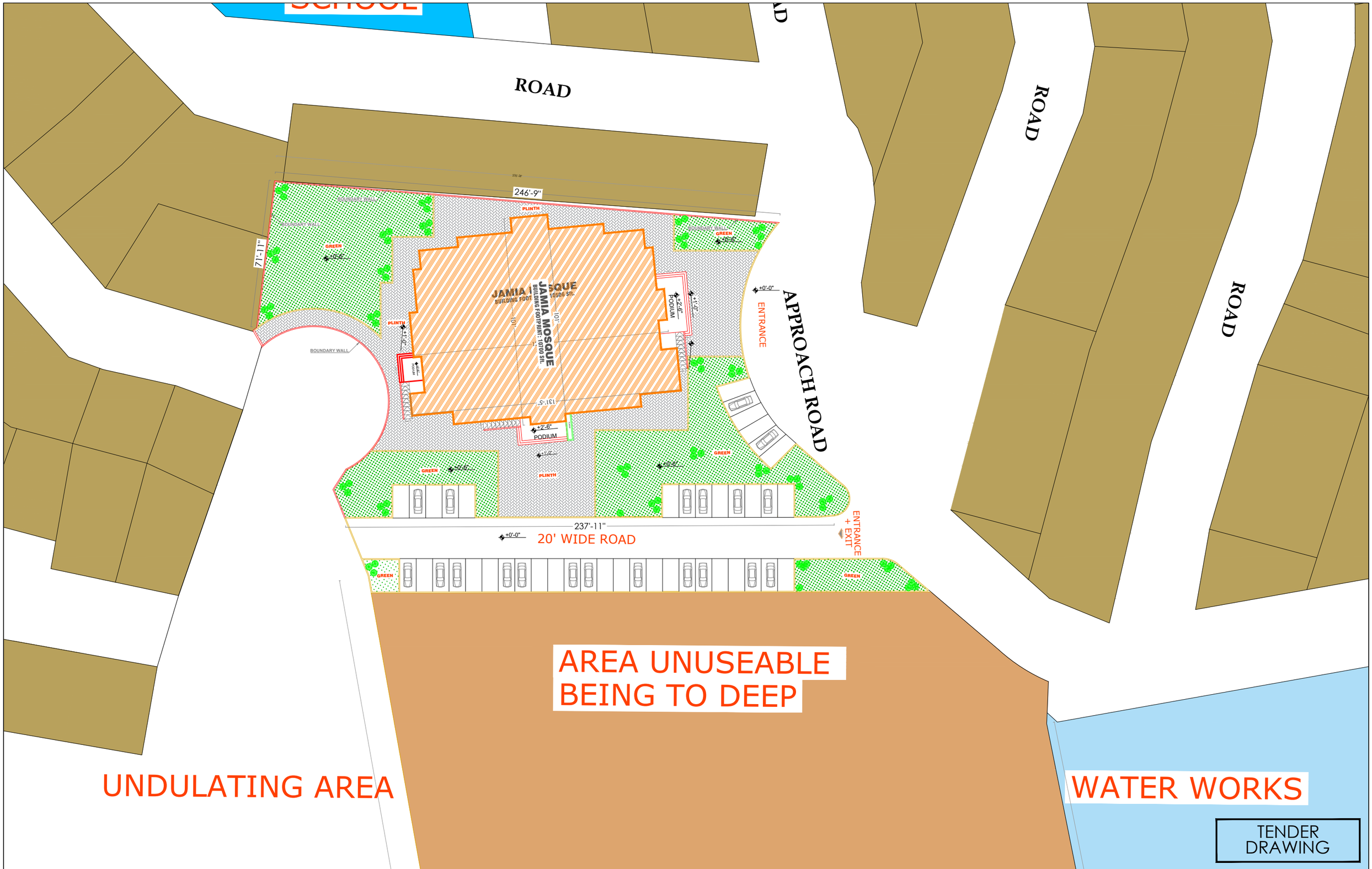

REV.	DATE	DESCRIPTION	APPROVED	APPROVED
04				DRAWN
03				SUBMITTED
02				RECOMMENDED
01				CHD./VER.

CLIENT:

PUNJAB GOVERNMENT SERVANTS HOUSING FOUNDATION

CONSULTANT:

HA CONSULTING
ARCHITECTS, ENGINEERS & PLANNERS

Address: H # 10-Block D2, First Floor Johar Town, Lahore, Pakistan.
Tel: +92 42 35182103-4
Email: info@haconsulting.co
Web: www.haconsulting.co

PROJECT:

ESTABLISHMENT OF PUNJAB GOVERNMENT SERVANTS HOUSING SCHEME AT RAWALPINDI.

TITLE: MASTER PLAN

SCALE: N.T.S

DATE: FEB, 2026

DWG. NO. A005-01

JOB NO. HAC-___

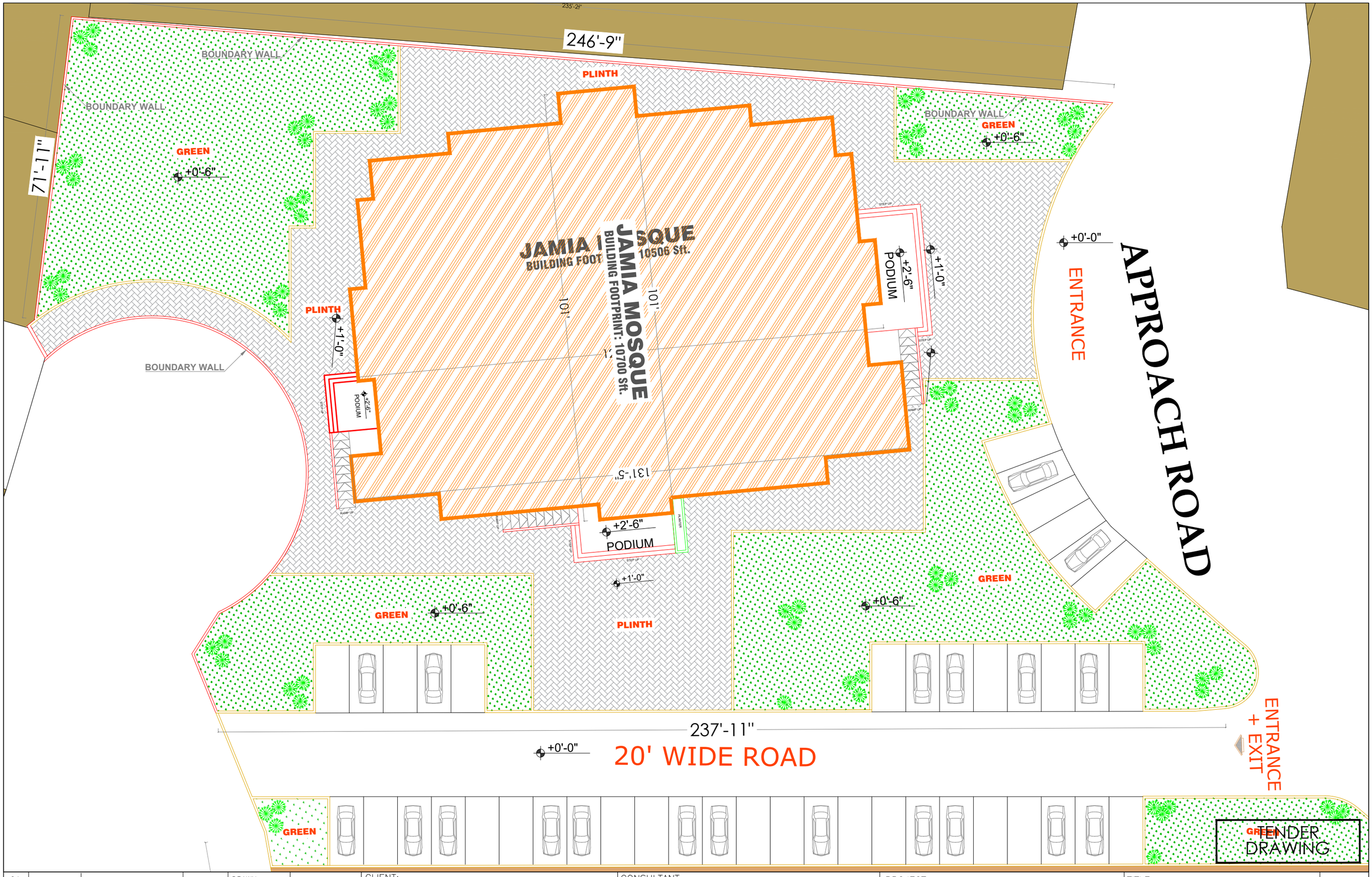

REV.	DATE	DESCRIPTION	APPROVED	APPROVED
04				DRAWN
03				SUBMITTED
02				RECOMMENDED
01				CHD./VER.

CLIENT:

PUNJAB GOVERNMENT SERVANTS HOUSING FOUNDATION

CONSULTANT:

HA CONSULTING
ARCHITECTS, ENGINEERS & PLANNERS
Address: H # 10-Block D2, First Floor Johar Town, Lahore, Pakistan.
Tel: +92 42 35182103-4
Email: info@haconsulting.co
Web: www.haconsulting.co

PROJECT:

ESTABLISHMENT OF PUNJAB GOVERNMENT SERVANTS HOUSING SCHEME AT RAWALPINDI.

TITLE: MASTER PLAN

SCALE: N.T.S

DATE: FEB, 2026

DWG. NO. A005-02

JOB NO. HAC-____

JAMIA MOSQUE

3D-VIEWS







TENDER DRAWING

REV.	DATE	DESCRIPTION	APPROVED	APPROVED	
04				DRAWN	
03				SUBMITTED	
02				RECOMMENDED	
01				CHD./VER.	

CLIENT:

PUNJAB GOVERNMENT SERVANTS HOUSING FOUNDATION

CONSULTANT:

HA CONSULTING
ARCHITECTS, ENGINEERS & PLANNERS

Address: H # 10-Block D2, First Floor Johar Town, Lahore, Pakistan.
Tel: +92 42 35182103-4
Email: info@haconsulting.co
Web: www.haconsulting.co

PROJECT:

ESTABLISHMENT OF PUNJAB GOVERNMENT SERVANTS HOUSING SCHEME AT RAWALPINDI.

TITLE: 3D-VIEWS

SCALE: N.T.S

DATE: FEB, 2026

DWG. NO. A005-03

JOB NO. HAC-___

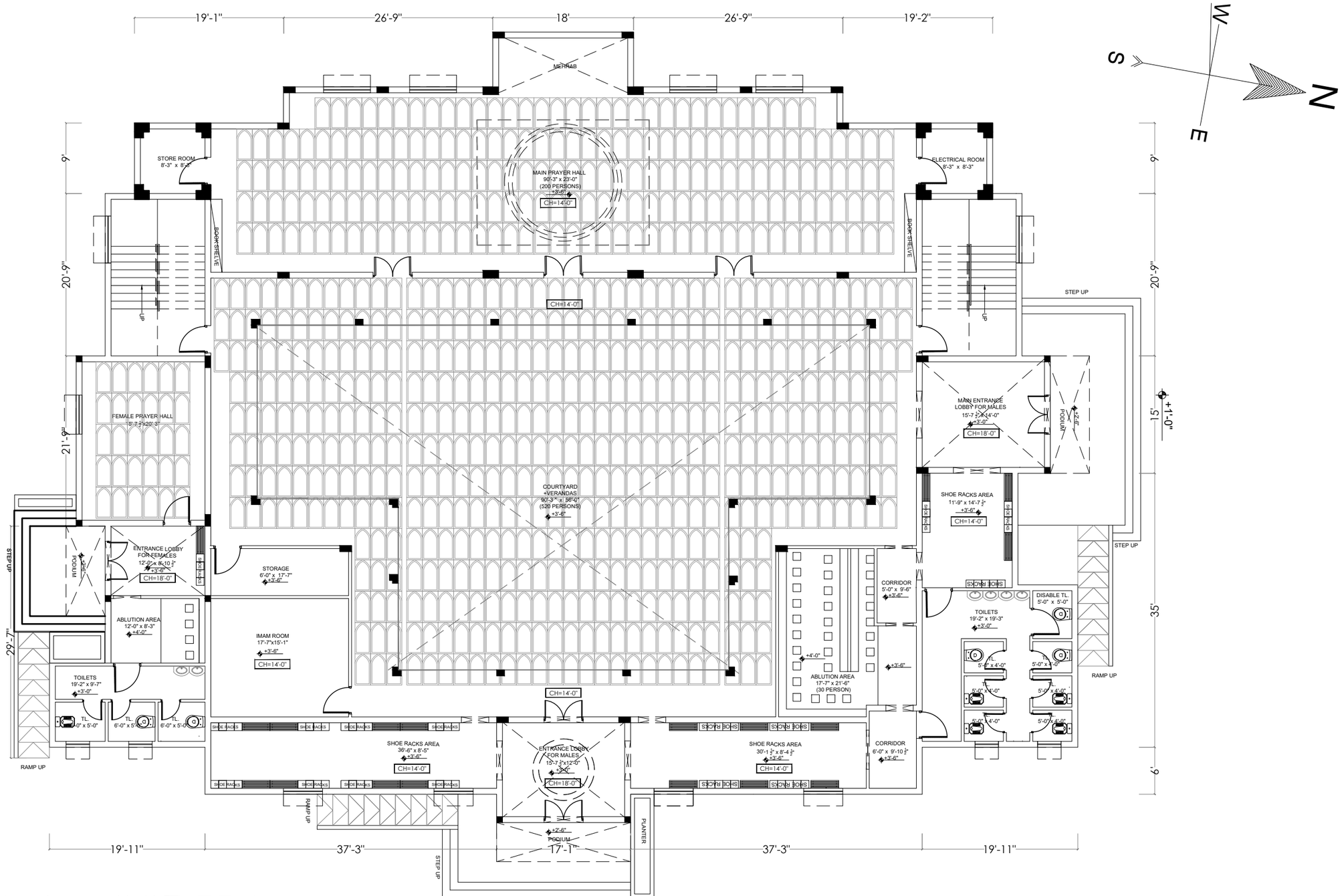

GROUND FLOOR PLAN
COVERED AREA : 8163 SQ FT.

ELEVATION–A

TENDER DRAWING

REV.	DATE	DESCRIPTION	APPROVED	APPROVED
04				DRAWN
03				SUBMITTED
02				RECOMMENDED
01				CHD./VER.

CLIENT:
PUNJAB GOVERNMENT SERVANTS HOUSING FOUNDATION

CONSULTANT:
HA CONSULTING
ARCHITECTS, ENGINEERS & PLANNERS
Address: H # 10-Block D2, First Floor Johar Town, Lahore, Pakistan.
Tel: +92 42 35182103-4
Email: info@haconsulting.co
Web: www.haconsulting.co

PROJECT:
ESTABLISHMENT OF PUNJAB GOVERNMENT SERVANTS HOUSING SCHEME AT RAWALPINDI.

TITLE: GROUND FLOOR PLAN

SCALE: N.T.S

DATE: FEB, 2026

DWG. NO. A005–04

JOB NO. HAC–___

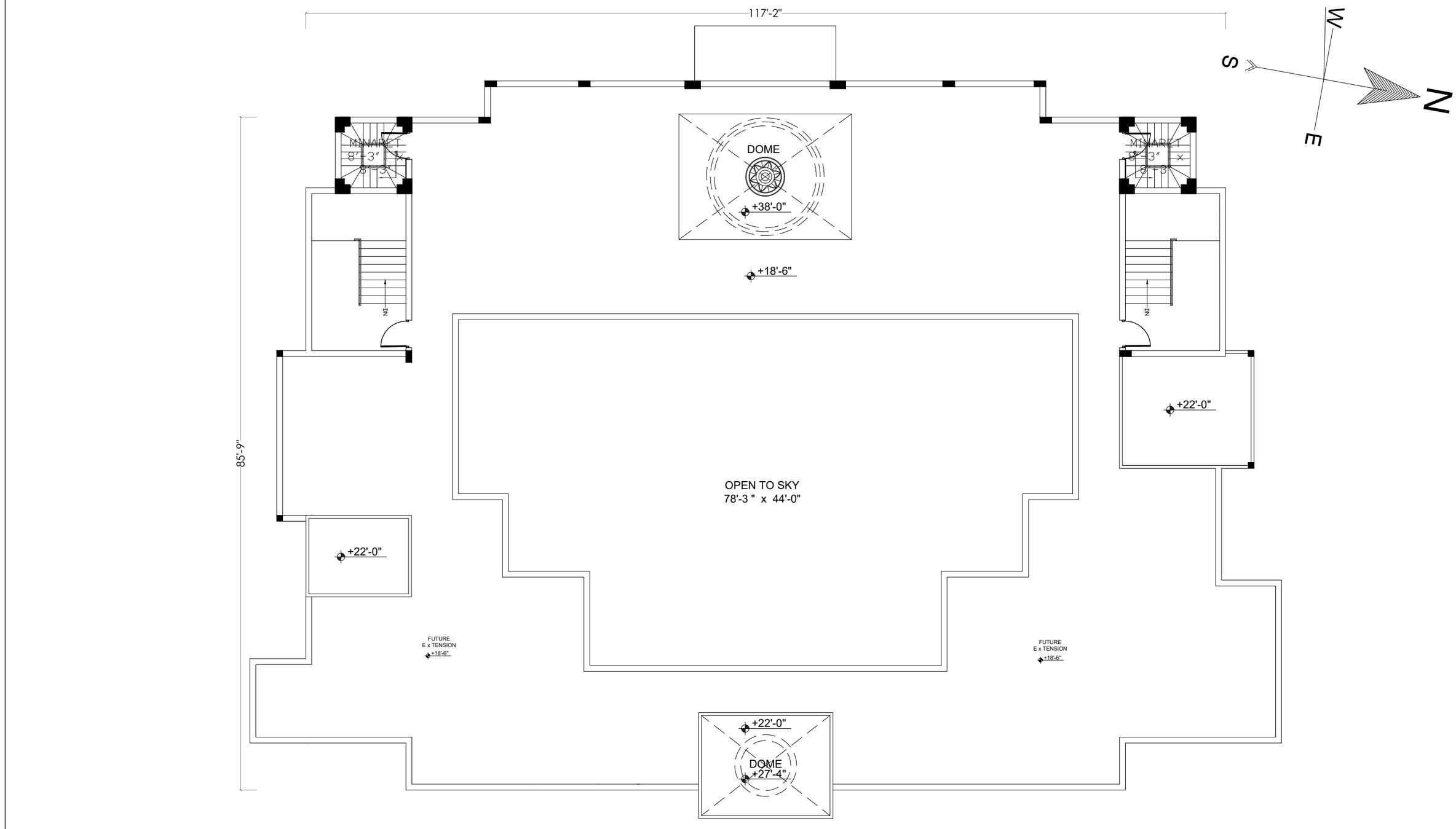

ROOF TOP FLOOR PLAN
COVERED AREA : 1108 SQ FT.

ELEVATION–A

TENDER DRAWING

REV.	DATE	DESCRIPTION	APPROVED	APPROVED
04				DRAWN
03				SUBMITTED
02				RECOMMENDED
01				CHD./VER.

CLIENT:
PUNJAB GOVERNMENT SERVANTS HOUSING FOUNDATION

CONSULTANT:
HA CONSULTING
ARCHITECTS, ENGINEERS & PLANNERS
Address: H # 10-Block D2, First Floor Johar Town, Lahore, Pakistan.
Tel: +92 42 35182103-4
Email: info@haconsulting.co
Web: www.haconsulting.co

PROJECT:
ESTABLISHMENT OF PUNJAB GOVERNMENT SERVANTS HOUSING SCHEME AT RAWALPINDI.

TITLE: ROOF TOP FLOOR PLAN

SCALE: N.T.S

DATE: FEB, 2026

DWG. NO. A005–05

JOB NO. HAC–___

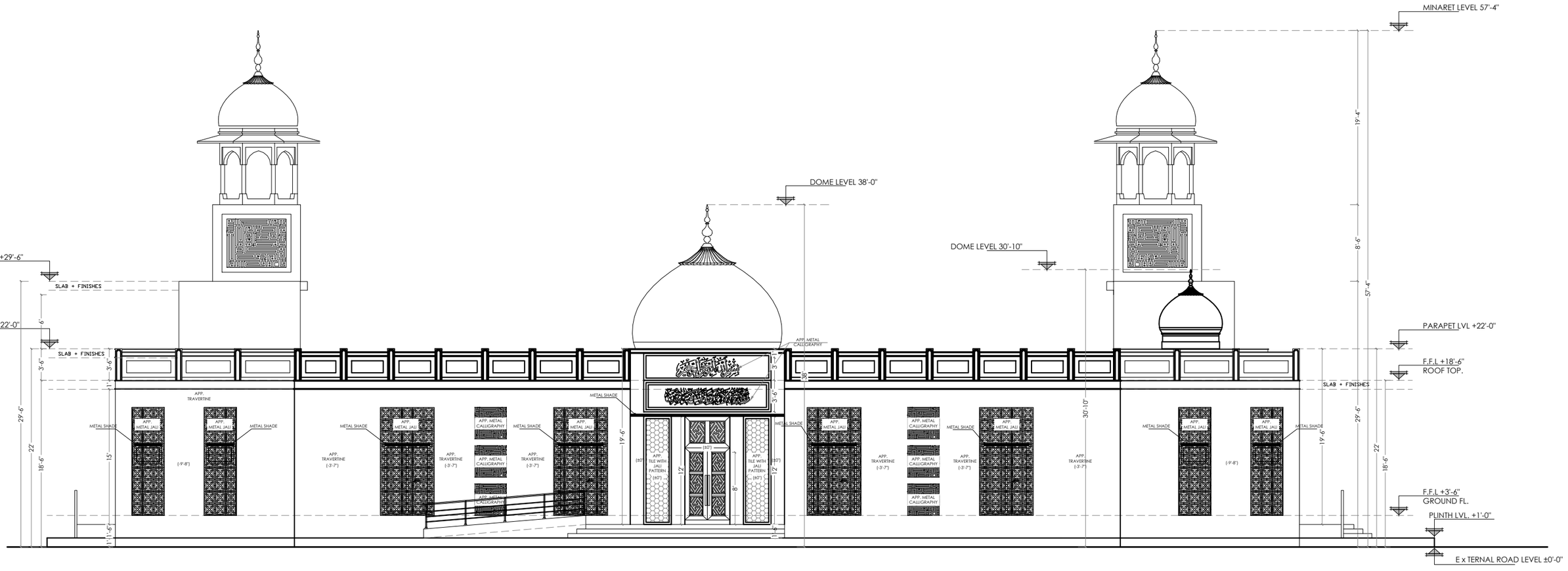

TENDER DRAWING

04				DRAWN	
03				SUBMITTED	
02				RECOMMENDED	
01				CHD./VER.	
REV.	DATE	DESCRIPTION	APPROVED	APPROVED	

CLIENT:

PUNJAB GOVERNMENT SERVANTS HOUSING FOUNDATION

CONSULTANT:

HA CONSULTING
ARCHITECTS, ENGINEERS & PLANNERS
Address: H # 10-Block D2, First Floor Johar Town, Lahore, Pakistan.
Tel: +92 42 35182103-4
Email: info@haconsulting.co
Web: www.haconsulting.co

PROJECT:

ESTABLISHMENT OF PUNJAB GOVERNMENT SERVANTS HOUSING SCHEME AT RAWALPINDI.

TITLE: ELEVATION

SCALE: N.T.S

DATE: FEB, 2026

DWG. NO. A005–06

JOB NO. HAC–___

STRUCTURE DRAWINGS

MOSQUE (RAWALPINDI)

A. GENERAL

1- NOTES GIVEN ON THIS DRAWING ARE APPLICABLE TO ALL STRUCTURAL DRAWINGS UNLESS OTHERWISE NOTED. NOTES WRITTEN ON ANY OTHER DRAWING SHALL BE APPLICABLE TO THAT PARTICULAR DRAWING ONLY UNLESS OTHERWISE CROSS REFERRED.

2- SYSTEM OF UNITS IS FPS.

3- THE CONTRACTOR SHALL BE RESPONSIBLE FOR THE SAFETY AND STABILITY OF THE STRUCTURE AND ALL TEMPORARY WORKS DURING CONSTRUCTION.

4- THE CONTRACTOR SHALL INFORM THE ENGINEER ABOUT ANTICIPATED CONSTRUCTION LOADS ON THE STRUCTURE AND OBTAIN ENGINEER'S APPROVAL THEREOF BEFORE COMMENCING WORK.

5- THE CONTRACTOR SHALL CO-ORDINATE ALL DRAWINGS OF ALL DISCIPLINES FOR ALL ITEMS INCLUDING BUT NOT LIMITED TO SIZES AND LOCATION OF ALL OPENINGS REQUIRED FOR DUCTS, PIPES AND PIPE SLEEVES, ELECTRICAL CONDUITS AND OTHER ITEMS TO BE EMBEDDED IN CONCRETE OR OTHERWISE INCORPORATED IN STRUCTURAL WORK AND SHALL BRING TO THE NOTICE OF THE ENGINEER DISCREPANCIES, IF ANY, FOR HIS INSTRUCTIONS, PRIOR TO THE START OF WORK.

6- THE CONTRACTOR SHALL PREPARE AND SUBMIT SHOP DRAWINGS AND BAR BENDING SCHEDULES FOR ENGINEER'S APPROVAL AND OBTAIN HIS APPROVAL BEFORE PROCEEDING WITH THE WORK. THE CONTRACTOR SHALL BE SOLELY RESPONSIBLE FOR THE ACCURACY OF SHOP DRAWINGS AND BAR BENDING SCHEDULES. THE ENGINEER'S APPROVAL SHALL NOT RELIEVE THE CONTRACTOR FROM HIS RESPONSIBILITY.

7- THE CONTRACTOR SHALL VERIFY LAYOUT, CONFIGURATION, ALL DIMENSIONS AND LEVELS PERTAINING TO EXISTING WORKS BEFORE PROCEEDING WITH THE WORK.

8- CONTRACTOR SHALL COORDINATE SCHEDULE OF CONSTRUCTION WITH SUPPLY AND INSTALLATION OF EQUIPMENT, GLAZING WINDOW FRAMES AND OTHER ATTACHMENTS AS SHOWN ON ARCHITECTURAL DRAWING.

9- ALL LEVELS MARKED ON THE DRAWINGS ARE LEVELS OF STRUCTURAL ELEMENTS. FINISH LEVELS SHALL BE IN ACCORDANCE WITH THE ARCHITECTURAL DRAWINGS.

10- ALL MATERIALS AND WORKMANSHIP SHALL CONFORM TO SPECIFICATIONS OF THE CONTRACT. IN ABSENCE OF ANY EXPRESS OR IMPLIED SPECIFICATION IN THE CONTRACT, ALL MATERIALS AND WORKMANSHIP SHALL CONFORM TO RELEVANT AMERICAN STANDARDS.

B. FOUNDATION AND EARTHWORK.

1- FOUNDATION HAS BEEN DESIGNED IS BASED ON ASSUMED ALLOWABLE BEARING CAPACITY OF = 0.9 TSF.

2- THE CONTRACTOR SHALL BE RESPONSIBLE FOR DEWATERING SYSTEM IF AND WHERE REQUIRED DURING CONSTRUCTION.

3- TERMITE CONTROL TREATMENT SHALL BE CARRIED OUT IN THE BUILDING AS PER SPECIFICATIONS.

4- THE CONTRACTOR SHALL SUPPLY AND ERECT ADEQUATE SHORING TO SUPPORT THE SIDES OF ALL EXCAVATIONS WHERE REQUIRED TO SAFEGUARD WORKMEN AND PROTECT ANY ADJACENT STRUCTURES.

5- EXISTING UNDERGROUND SERVICES, REQUIRED TO BE LEFT IN POSITION, SHALL BE CAREFULLY PROTECTED DURING EXCAVATION AND BACKFILLING OPERATIONS.

6- WALLS OF UNDERGROUND TANK AND BASEMENT SHALL NOT BE BACKFILLED UNTIL TOP SLAB IS CAST AND CURED.

7- ANTI-TERMITE TREATMENT IS RECOMMENDED BEFORE CONSTRUCTION OF FOOTING.

C. REINFORCED CONCRETE.

1- ALL CONCRETE SHALL BE TESTED IN ACCORDANCE WITH ASTM STANDARD SPECIFICATIONS AND SHALL COMPLY WITH THE FOLLOWING REQUIREMENT. TESTING OF CLASS D & E CONCRETE SHALL BE PERFORMED IF SO DIRECTED BY THE ENGINEER.

CLASS	MIN. CYLINDER CRUSHING STRENGTH AT 28 DAYS
	psi.
A	4000
B	3000
C	1500

2- CLASS OF CONCRETE FOR DIFFERENT COMPONENTS OF THE STRUCTURE SHALL COMPLY WITH THE FOLLOWING:

COMPONENT	CONCRETE CLASS
COLUMNS & SHEAR WALLS	A
SLABS/BEAMS	B
O.H.TANK	B
REATINING WALL	B
FOUNDATION	B
LEAN 1:4:8	C
ALL OTHERS	B

3- ORDINARY PORTLAND CEMENT SHALL BE USED IN ALL CONCRETE WORKS.

4- ALL REINFORCEMENT SHALL BE DEFORMED, CONFORMING TO ASTM A-615 GRADE 60 WITH SPECIFIED YIELD STRENGTH OF NOT LESS THAN 60,000 PSI NOR MORE THAN 78000 PSI, AND RATIO OF ULTIMATE STRENGTH / YIELD STRENGTH NOT LESS THAN 1.25.

5- ALL DETAILING SHALL BE DONE AS PER ACI STANDARDS ACI-315 AND ACI-318.

6- CONCRETE CLEAR COVER FOR REINFORCING STEEL SHALL BE AS FOLLOWS: MINIMUM COVER

CONCRETE CAST AGAINST AND PERMANENTLY EXPOSED TO EARTH	3"
CONCRETE EXPOSED TO EARTH/ WATER OR WEATHER:	
BAR DIA > #6	2"
BAR DIA < #5	1 1/2"
CONCRETE NOT EXPOSED TO WEATHER OR IN CONTACT WITH GROUND:	
SLABS & WALLS	3/4"
BEAMS, COLUMNS, PRIMARY REINFORCEMENT, TIES & STIRRUPS	1 1/2"

7a- ALL REINFORCING STEEL SHALL BE HELD FIRMLY IN PLACE BEFORE AND DURING THE PLACING OF CONCRETE BY MEANS OF WIRES AND SUPPORTS ADEQUATE TO PREVENT DISPLACEMENT DURING THE COURSE OF CONSTRUCTION.

7b- AT THE TIME CONCRETE IS PLACED, REINFORCEMENT SHALL BE FREE FROM MUD, OIL, OR OTHER NON METALLIC COATINGS THAT DECREASE BOND.

8- BEFORE CASTING OF ANY STRUCTURAL MEMBER, THE CONTRACTOR SHALL ENSURE THAT ALL EMBEDDED ITEMS FOR ELECTRICAL, MECHANICAL, HVAC, PLUMBING, STRUCTURAL STEEL AND OTHER WORKS, AND DOWELS FOR STRUCTURAL MEMBERS AND/OR MASONARY ARE PROPERLY LOCATED IN PLACE.

9. EMBEDMENT LENGTHS

UNLESS OTHERWISE STATED ON THE DRAWINGS, THE FOLLOWING EMBEDMENT LENGTHS SHALL BE PROVIDED.

BAR SIZE	3/8"Ø	1/2"Ø	5/8"Ø	3/4"Ø	1"Ø
EMBEDMENT LENGTH	21"	28"	34"	41"	55"

10. LAP LENGTH

UNLESS OTHERWISE STATED ON THE DRAWING,THE FOLLOWING LAP LENGTHS SHALL BE PROVIDED.

BAR SIZE	3/8"Ø	1/2"Ø	5/8"Ø	3/4"Ø	1"Ø
LAP LENGTH	23"	30"	38"	45"	60"

EXCEPT WHEN OTHERWISE SHOWN ON THE DRAWING, WHENEVER REINFORCING BARS OF DIFFERENT SIZES ARE TO BE SPLICED,LAP LENGTH SHALL BE LARGER OF Ld OF LARGER BAR & TENSION LAP SPLICE LENGTH OF SMALLER BAR

11- DEVELOPMENT LENGTH OF 90° HOOKS SHOULD BE 17db AND SHOULD BE ANCHORED IN CONFINED CORE OF COLUMN.

12- CONSTRUCTION JOINTS NOT SHOWN ON THE DRAWINGS SHALL BE SO MADE AND LOCATED AS TO LEAST IMPAIR THE STRENGTH OF THE STRUCTURE AND SHALL NEED PRIOR APPROVAL OF THE ENGINEER. IN GENERAL THEY SHALL BE LOCATED NEAR THE MIDDLE OF THE SPAN OF SLABS AND BEAMS. JOINTS IN COLUMNS SHALL BE AT THE UNDERSIDE OF FLOORS, SLABS OR BEAMS AND AT THE TOP OF FOOTINGS OR FLOOR SLABS. JOINTS SHALL BE PERPENDICULAR TO MAIN REINFORCEMENT. ALL REINFORCING STEEL SHALL BE CONTINUED ACROSS JOINTS.

13- FLOOR SLABS SUBJECT TO VEHICULAR TRAFFIC SHALL BE TREATED WITH APPROVED METALLIC FLOOR HARDENER.

14. CONSTRUCTION JOINTS

SURFACE OF CONCRETE CONSTRUCTION JOINTS SHALL BE CLEANED AND LAITANCE REMOVED.

IMMEDIATELY BEFORE NEW CONCRETE IS PLACED, ALL CONSTRUCTION JOINTS SHALL BE WETTED AND STANDING WATER REMOVED.

BEAMS, GIRDERS, OR SLABS SUPPORTED BY COLUMNS OR WALLS SHALL NOT BE CAST OR ERECTED UNTIL CONCRETE IN THE VERTICAL SUPPORT MEMBERS IS NO LONGER PLASTIC.

D- BRICK MASONRY WORKS

1- ALL MASONRY DESIGN AND CONSTRUCTION SHALL CONFORM TO ACI 530-02/ASCE 5-02 LOCAL AUTHORITY REQUIREMENTS AND SPECIFICATIONS. EQUIVALENT BRITISH STANDARDS MAY BE CONSIDERED SUBJECT TO APPROVAL OF THE EMPLOYER. CONSULTANT.

2- THE CONTRACTOR IS TO TAKE PARTICULAR CARE THAT ALL THE PERPENDS AND BEDS ARE PROPERLY FILLED WITH MORTOR.

3- ALL CONTROL JOINTS SHALL BE FILLIED WITH COMPRESSIBLE EXPANDABLE FILLER. REFER TO SPECIFICATIONS FOR FIRE RATED WALLS.

4- FIRE RATING, SOUND AND THERMAL INSULATION PROPERTIES SHALL BE IN ACCORDANCE WITH THE PROJECT SPECIFICATIONS.

5- PROVIDE LINTELS OVER ALL OPENING OR RECESSES IN MASONRY WALLS INCLUDING THOSE FOR MECHANICAL OR ELECTRICAL SERVICES OR EQUIPMENT. SEE STANDARD DETAIL DRAWINGS FOR LINTEL SIZES AND DETAILS.

6- PROVIDE RESTRAINT TO ALL MASONRY WALLS AT SLAB SOFFIT AND SIDES AS SHOWN IN STANDARD DETAIL DRAWINGS.

7- ALL MASONRY ANCHORS, MASONRY TIES AND EMBEDDED ITEMS SHALL BE HOT DIP GALVANIZED.

8- PROVIDE HORIZONTAL BED JOINT REINFORCEMENT IN ACCORDANCE WITH STANDARD DETAIL DRAWINGS AND SPECIFICATIONS.

9- USE 4½" THICK MASONRY WALL ONLY & USE 2½" THICK FLOOR FINISH.

E. PROPS, FORMWORK AND CURING.

1- SEQUENCE OF REMOVAL OF FORMWORK SHALL BE AS APPROVED BY THE ENGINEER.

2- ALL PROPS, BRACINGS, GUY WIRE PROPS, ETC. REQUIRED FOR STRENGTH AND STABILITY OF THE STRUCTURE AND THE FORMWORK DURING CONSTRUCTION SHALL BE PROVIDED BY THE CONTRACTOR.

3- AT LEAST ONE LOWER FLOOR SHALL REMAIN PROPPED UNTIL THE UPPER FLOOR IS CAST AND CURED.

F. OPENINGS.CONCEALED CABLES AND CAST -IN CONDUITS

1. NO HOLES OR CHASES ARE PERMITTED IN CONCRETE MEMBERS OTHER THAN THOSE AS DETAILED IN THE STRUCTURE DRAWINGS OR AUTHORIZED BY THE ENGINEER PRIOR TO CONCRETING
2. NO HACKING OR CORING OF STRUCTURE IS PERMITTED WITHOUT PRIOR WRITTEN APPROVAL FORM THE ENGINEER.
3. PRIOR TO CONSTRUCTION THE CONTRACTOR SHALL COORDINATE ALL STRUCTURAL, ARCHITECTURAL AND MECHANICAL & ELECTRICAL (M&E) DRAWINGS FOR OPENINGS, CONCEALED CABLES AND CAST -IN CONDUITS AND FITTINGS. THE CONTRACTOR SHALL INFORM THE ENGINEER IMMEDIATELY OF ANY DISCREPANCIES IN DRAWINGS PRIOR TO CONSTRUCTION.
4. LOCATION ,MAXIMUM SIZE AND MINIMUM SPACING OF EMBEDDED PIPE AND CONDUITS IN R.C SLAB.

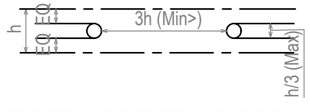

5. CONDUITS, PIPES, AND SLEEVES PASSING THROUGH A SLAB WALL, OR BEAM SHALL NOT IMPAIR SIGNIFICANTLY THE STRENGTH OF THE CONSTRUCTION.

TENDER DRAWING

REV.	DATE	DESCRIPTION	APPROVED
04			DRAWN
03			SUBMITTED
02			RECOMMENDED
01			CHD./VER.

CLIENT: PUNJAB GOVERNMENT SERVANTS HOUSING FOUNDATION

CONSULTANT: HA CONSULTING, ARCHITECTS, ENGINEERS & PLANNERS
Address: H # 10-Block D2, First Floor Johar Town, Lahore, Pakistan.
Tel: +92 42 35182103-4
Email: info@haconsulting.co
Web: www.haconsulting.co

PROJECT: ESTABLISHMENT OF PUNJAB GOVERNMENT SERVANTS HOUSING SCHEME, RAWALPINDI.

TITLE: GENERAL NOTES

SCALE: N.T.S

DATE: OCT, 2025

DWG. NO. S001-00

JOB NO.

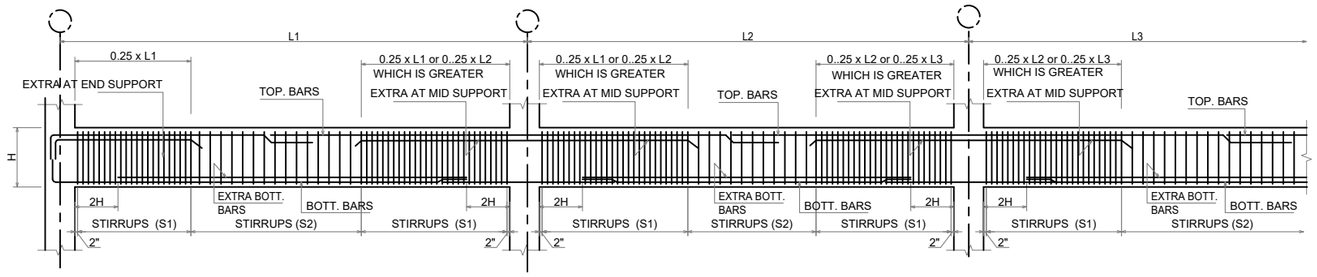

TYP BARS CUTOFF DETAILS FOR BEAM

1- SPACING OF S1 SHALL NOT EXCEED THE SMALLEST OF (a) (b) (c)
   (a) d/4
   (b) 6xdb (Smallest Primary Flexural Rft.)
   (c) 6 inches
2- SPACING OF S2
   (a) d/2

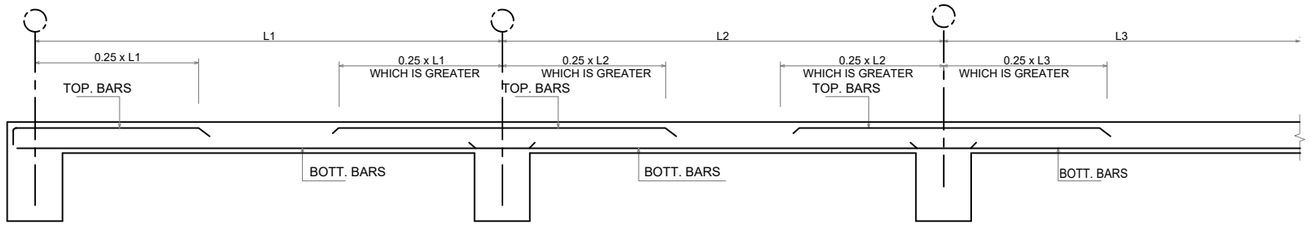

TYP BARS CUTOFF DETAILS FOR SLAB

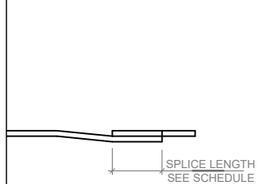

BEAM SPLICE (TYP)

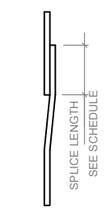

COLUMN SPLICE (TYP)

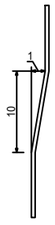

JOGGLE DETAIL (COLUMN)
RATIO (1:10)

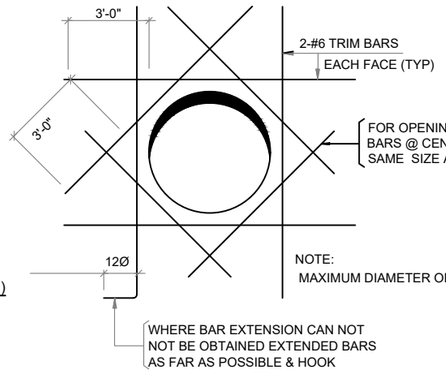

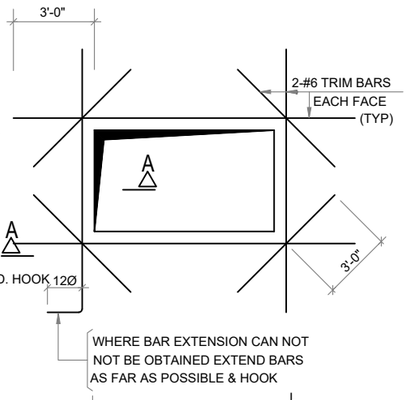

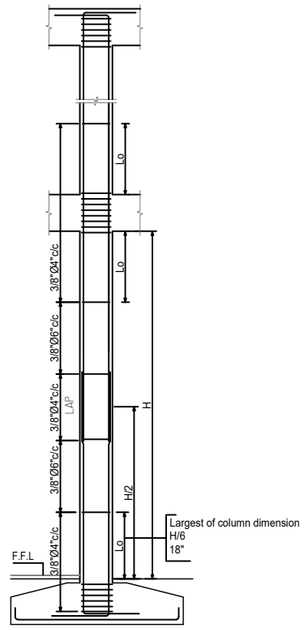

TYP. ELEVATION OF COLUMN

SCHEDULE OF LINTELS

S/No	CLEAR SPAN	CONFIGURATION	
1	UPTO 4'-0"	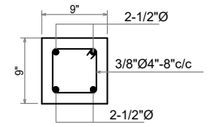	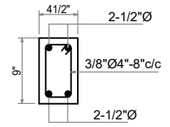
2	UPTO 6'-0"	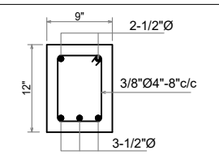	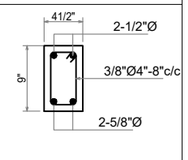
3	UPTO 8'-0"	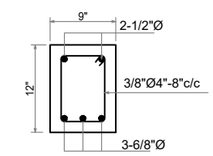	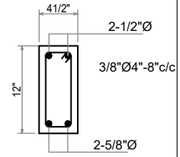
5	UPTO 10'-0"	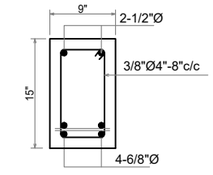	
6	TYP. Lintal Detail On All Walls	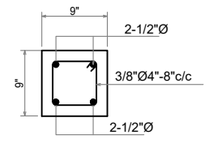	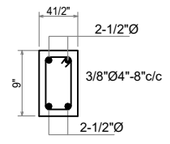

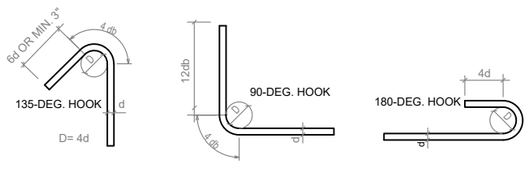

STIRRUPS AND TIE HOOKS

STANDARD BAR HOOKS

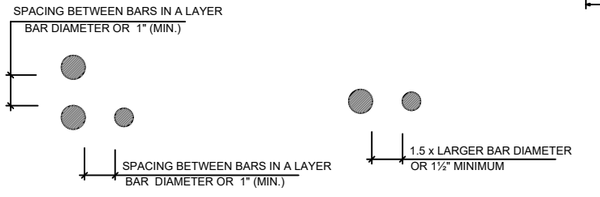

BAR SPACING IN BEAM

VERTICAL BAR SPACING (COLUMN)

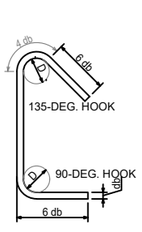

REINF: AROUND SLEEVE IN SLAB & WALLS (TYP)

(OPENING SIZE: 36" > OPENING DIAMETER > 12")

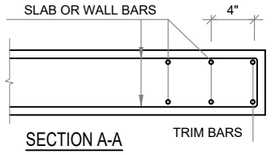

SECTION A-A

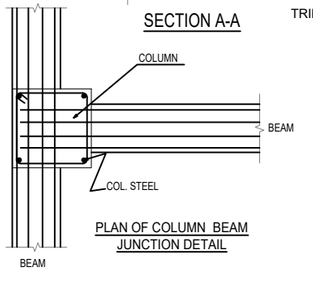

PLAN OF COLUMN BEAM JUNCTION DETAIL

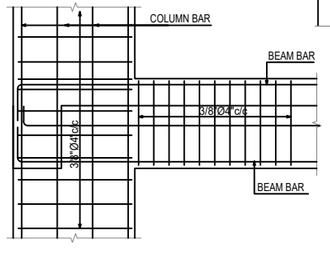

ELEVATION OF COLUMN BEAM JUNCTION DETAIL

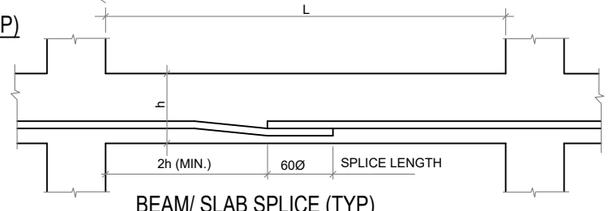

BEAM/ SLAB SPLICE (TYP)

TENDER DRAWING

REV.	DATE	DESCRIPTION	APPROVED
04			
03			
02			
01			

DRAWN | SUBMITTED | RECOMMENDED | CHD./VER. | APPROVED

CLIENT: PUNJAB GOVERNMENT SERVANTS HOUSING FOUNDATION

CONSULTANT: HA CONSULTING, ARCHITECTS, ENGINEERS & PLANNERS
Address: H # 10-Block D2, First Floor Johar Town, Lahore, Pakistan.
Tel: +92 42 35182103-4
Email: info@haconsulting.co
Web: www.haconsulting.co

PROJECT: ESTABLISHMENT OF PUNJAB GOVERNMENT SERVANTS HOUSING SCHEME, RAWALPINDI.

TITLE: GENERAL DETAILS

SCALE: N.T.S

DATE: OCT, 2025

DWG. NO. S001-00

JOB NO.

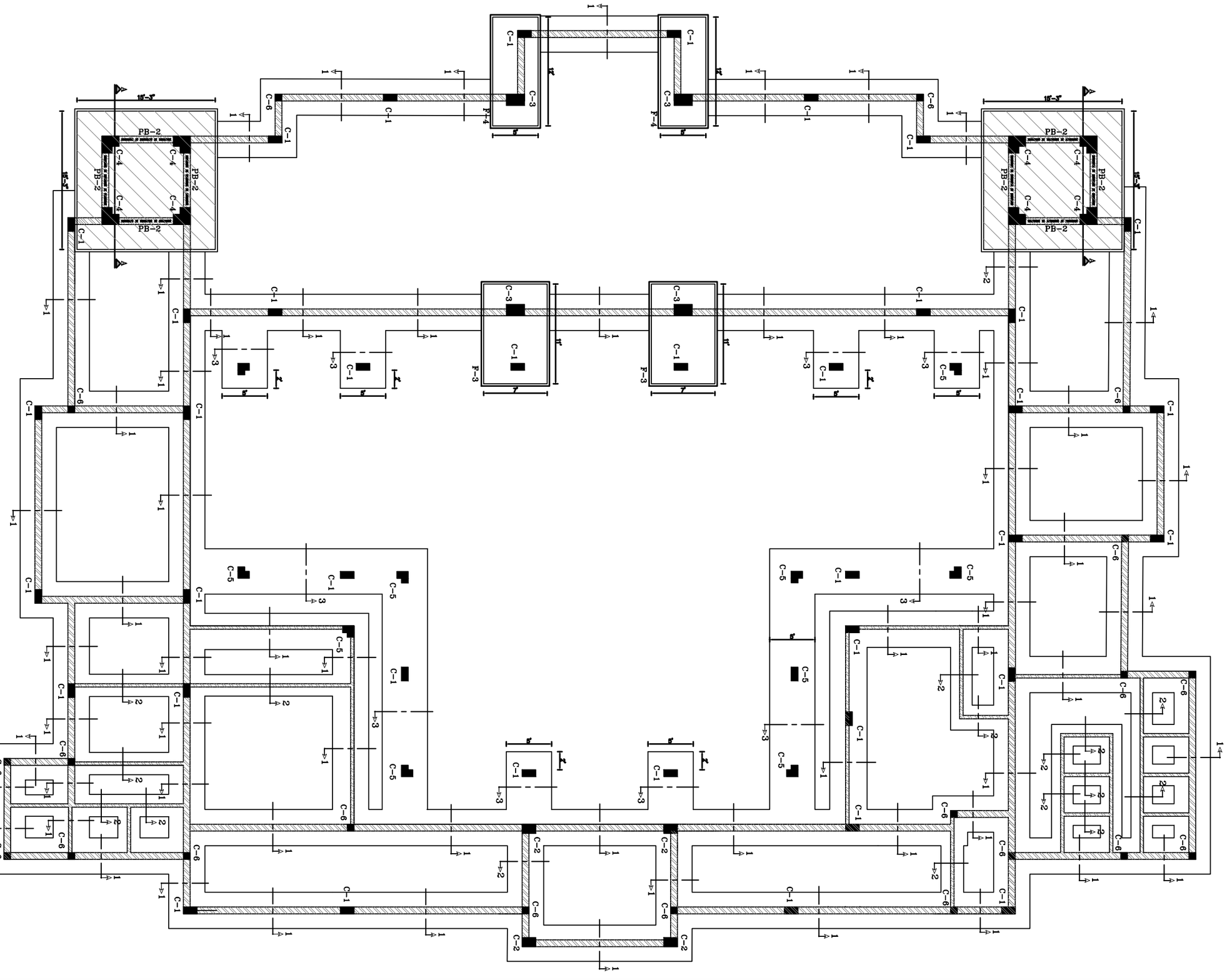

TENDER DRAWING

REV.	DATE	DESCRIPTION	APPROVED	APPROVED
04				DRAWN
03				SUBMITTED
02				RECOMMENDED
01				CHD./VER.

CLIENT:

PUNJAB GOVERNMENT SERVANTS HOUSING FOUNDATION

CONSULTANT:

HA CONSULTING
ARCHITECTS, ENGINEERS & PLANNERS
Address: H # 10-Block D2, First Floor Johar Town, Lahore, Pakistan.
Tel: +92 42 35182103-4
Email: info@haconsulting.co
Web: www.haconsulting.co

PROJECT:

ESTABLISHMENT OF PUNJAB GOVERNMENT SERVANTS HOUSING SCHEME, RAWALPINDI.

TITLE: FOOTING PLAN

SCALE: N.T.S

DATE: OCT, 2025

DWG. NO. S001-01

JOB NO.

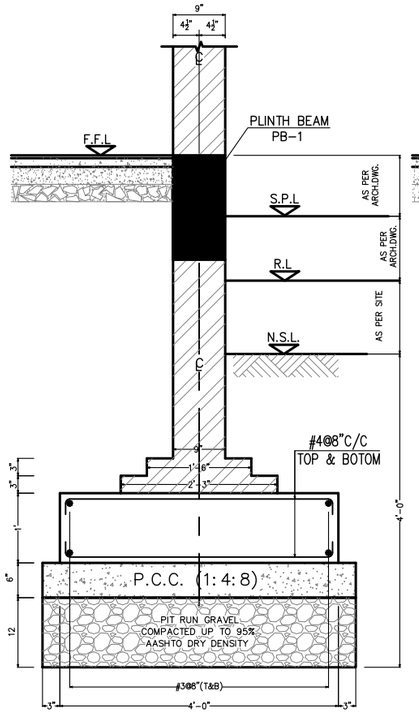

TYP. 9" THICK
BRICK WALL DETAIL
(SEC. 1-1)

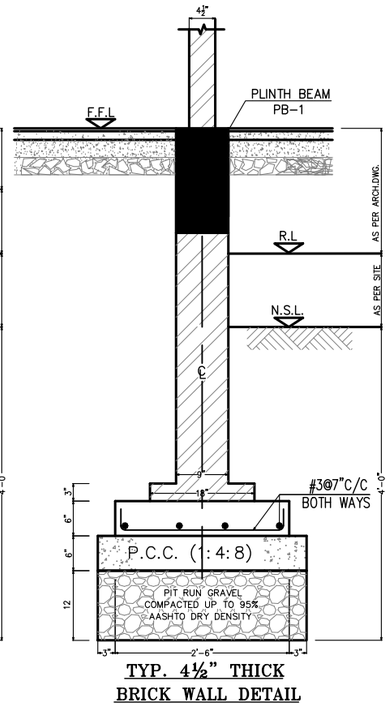

TYP. 4½" THICK
BRICK WALL DETAIL
(SEC. 2-2)

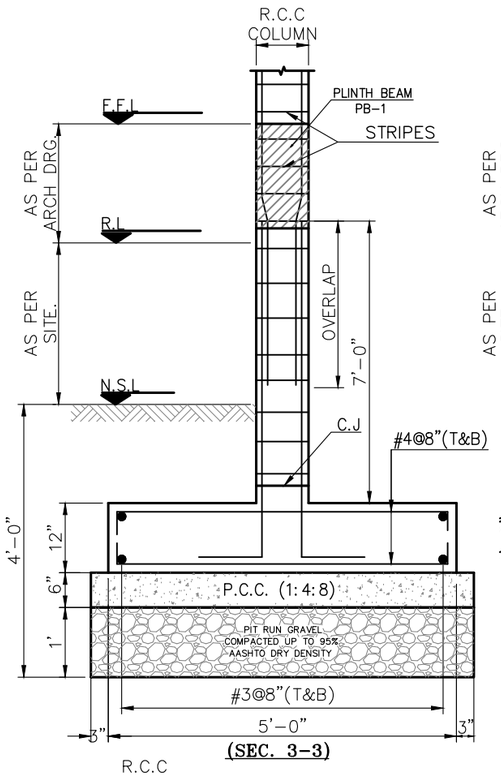

(SEC. 3-3)

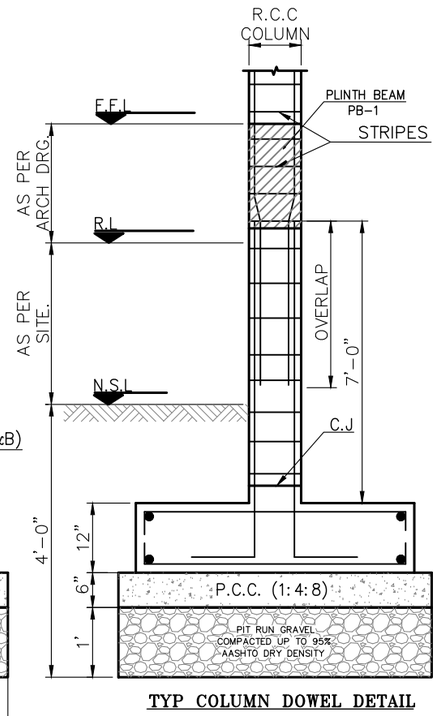

TYP COLUMN DOWEL DETAIL

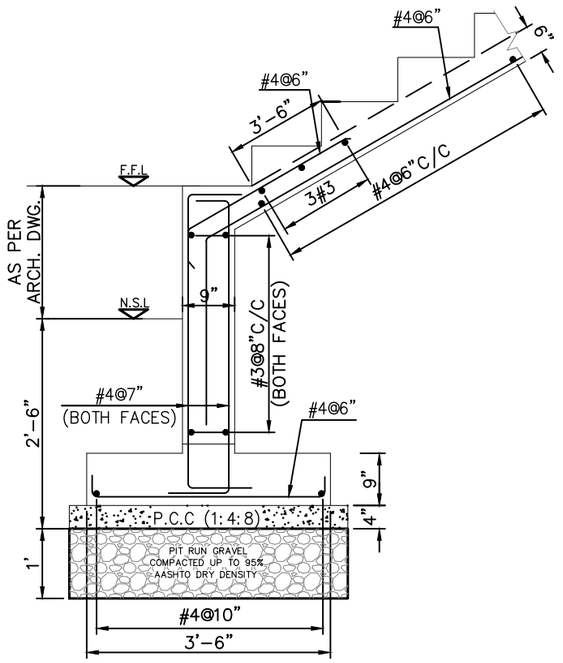

STAIR FOOTING DETAIL

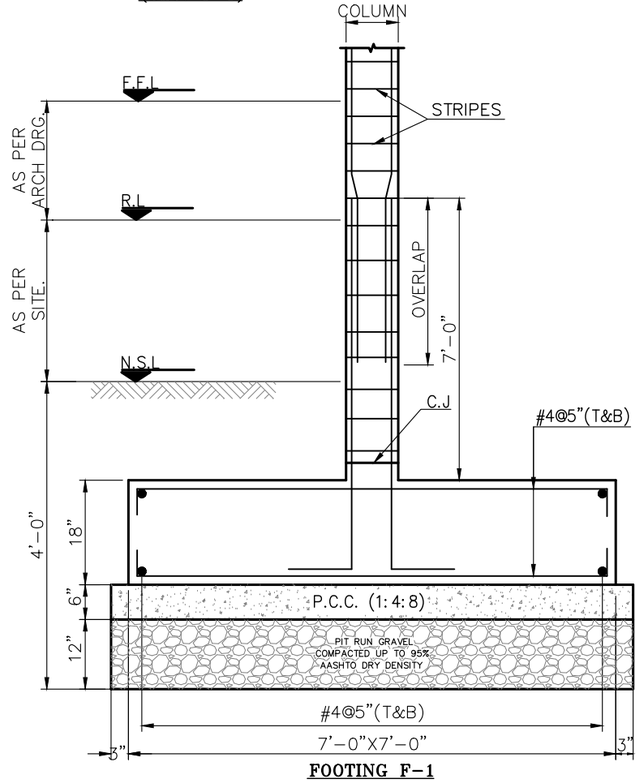

FOOTING F-1

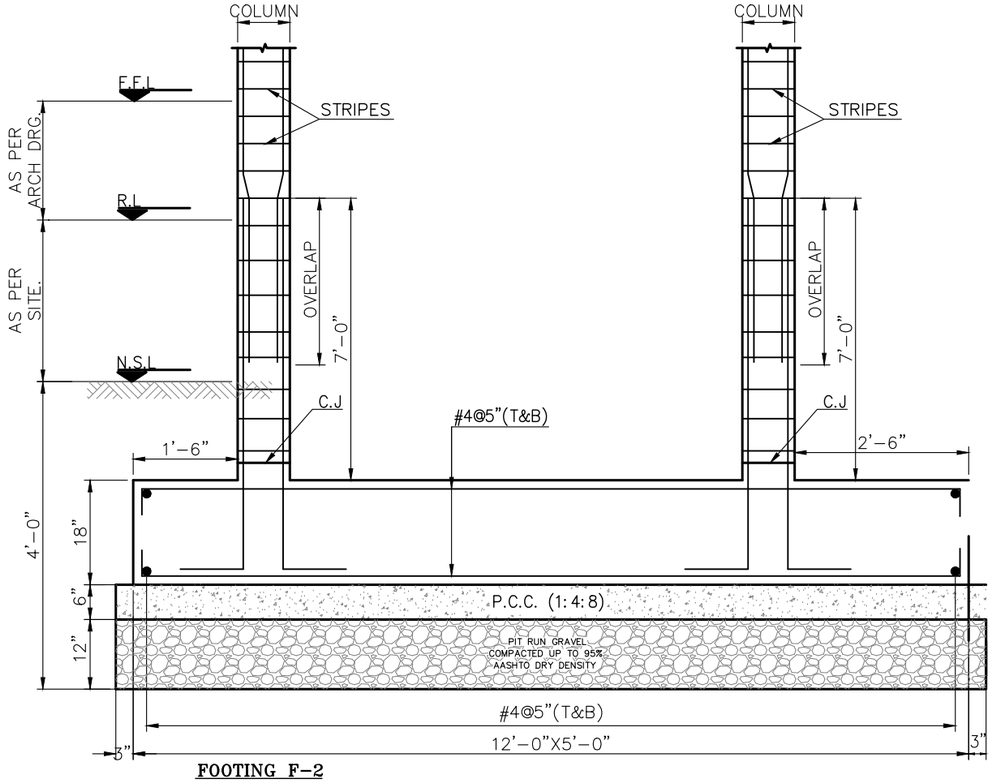

FOOTING F-2

TENDER
DRAWING

REV.	DATE	DESCRIPTION	APPROVED
04			
03			
02			
01			

DRAWN | SUBMITTED | RECOMMENDED | CHD./VER. | APPROVED

CLIENT:
PUNJAB GOVERNMENT SERVANTS
HOUSING FOUNDATION

CONSULTANT:
HA CONSULTING
ARCHITECTS, ENGINEERS & PLANNERS
Address: H # 10-Block D2, First Floor Johar Town, Lahore, Pakistan.
Tel: +92 42 35182103-4
Email: info@haconsulting.co
Web: www.haconsulting.co

PROJECT:
ESTABLISHMENT OF PUNJAB
GOVERNMENT SERVANTS
HOUSING SCHEME, RAWALPINDI.

TITLE:
FOOTING SECTION DETAIL

SCALE: N.T.S

DATE: OCT, 2025

DWG. NO. S001-2

JOB NO.

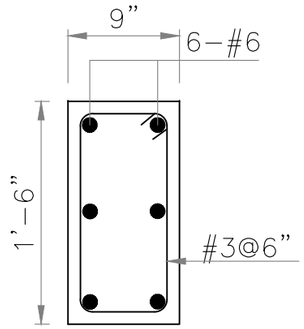

C-1

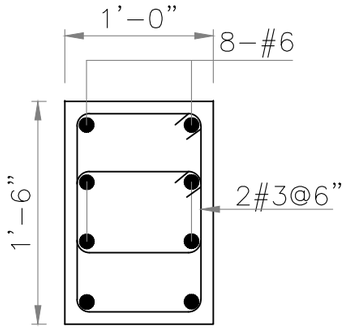

C-2

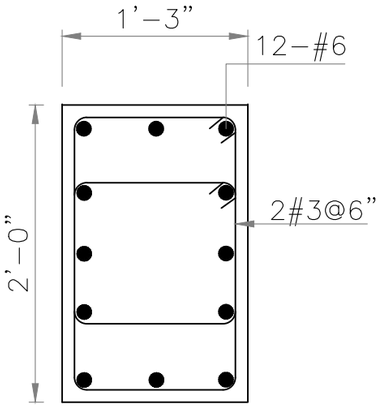

C-3

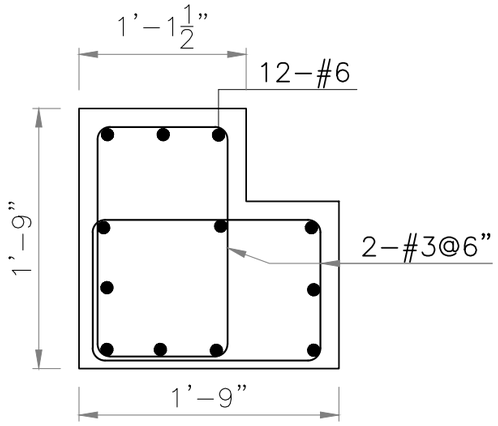

C-4

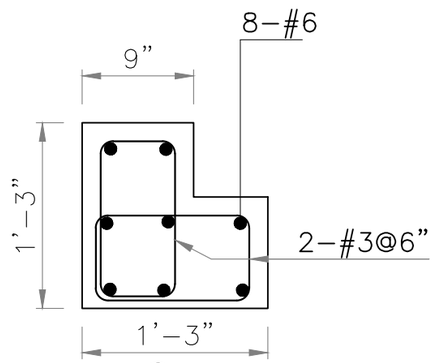

C-5

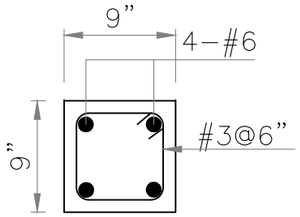

C-6

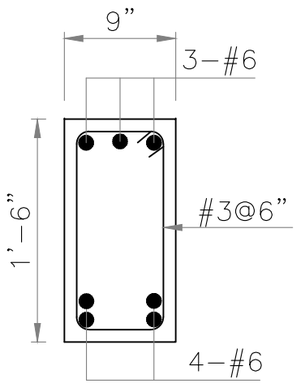

PLINTH BEAM
PB-1

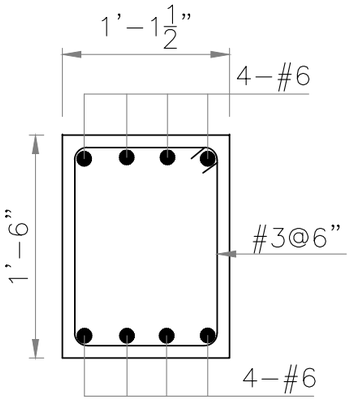

PLINTH BEAM
PB-2

LEGEND:

1- DAMP PROOF COURSE (D.P.C)
2- NATURAL SOIL LEVEL (N.S.L)
3- ROAD LEVEL (R.L)
4- FINISH FLOOR LEVEL (F.F.L)
5- SIDE PASSAGE LEVEL (S.P.L)

TENDER DRAWING

REV.	DATE	DESCRIPTION	APPROVED
04			
03			
02			
01			

DRAWN | SUBMITTED | RECOMMENDED | CHD./VER. | APPROVED

CLIENT:
PUNJAB GOVERNMENT SERVANTS HOUSING FOUNDATION

CONSULTANT:
HA CONSULTING
ARCHITECTS, ENGINEERS & PLANNERS
Address: H # 10-Block D2, First Floor Johar Town, Lahore, Pakistan.
Tel: +92 42 35182103-4
Email: info@haconsulting.co
Web: www.haconsulting.co

PROJECT:
ESTABLISHMENT OF PUNJAB GOVERNMENT SERVANTS HOUSING SCHEME, RAWALPINDI.

TITLE: FOOTING SECTION DETAIL

SCALE: N.T.S

DATE: OCT, 2025

DWG. NO. S001–3

JOB NO.

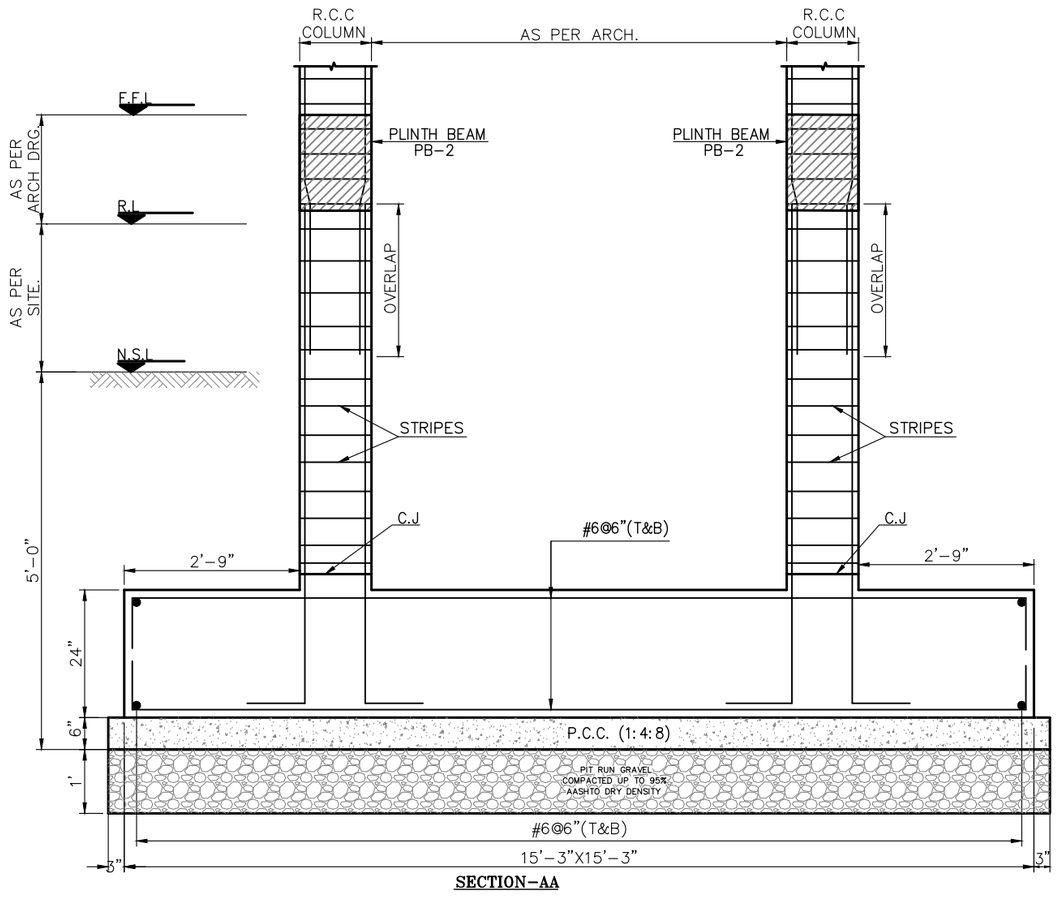

SECTION–AA

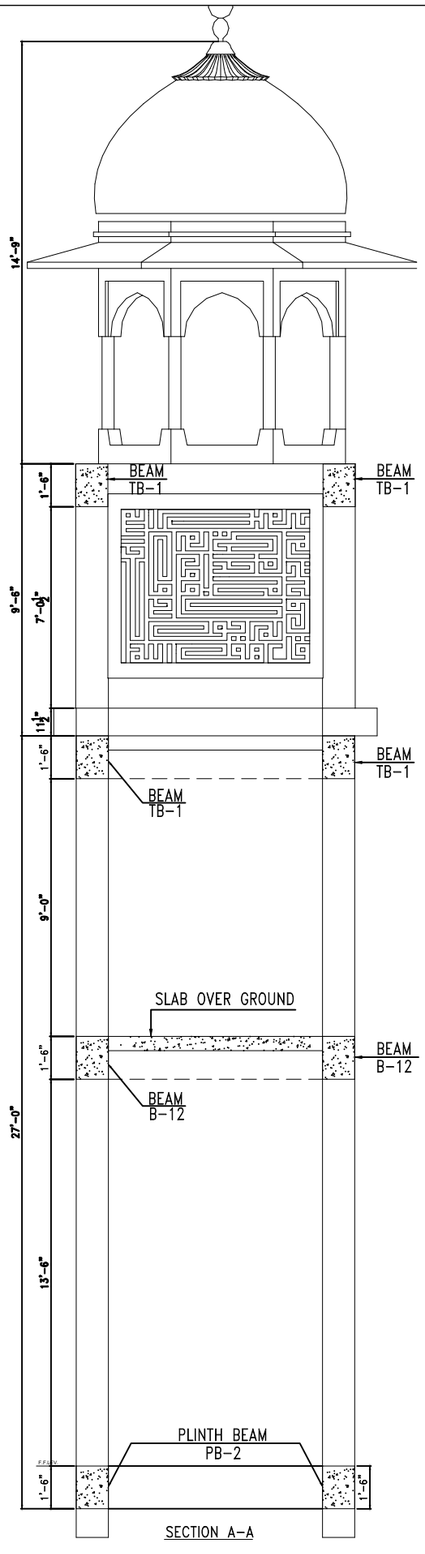

SECTION A–A

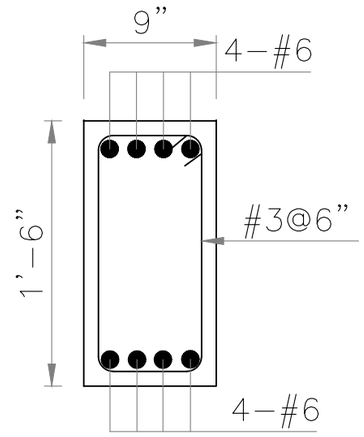

TB-1

TENDER DRAWING

REV.	DATE	DESCRIPTION	APPROVED
04			DRAWN
03			SUBMITTED
02			RECOMMENDED
01			CHD./VER.
			APPROVED

CLIENT:
PUNJAB GOVERNMENT SERVANTS HOUSING FOUNDATION

CONSULTANT:
HA CONSULTING
ARCHITECTS, ENGINEERS & PLANNERS
Address: H # 10-Block D2, First Floor Johar Town, Lahore, Pakistan.
Tel: +92 42 35182103-4
Email: info@haconsulting.co
Web: www.haconsulting.co

PROJECT:
ESTABLISHMENT OF PUNJAB GOVERNMENT SERVANTS HOUSING SCHEME, RAWALPINDI.

TITLE:
FOOTING SECTION DETAIL

SCALE: N.T.S

DATE: OCT, 2025

DWG. NO. S001–4

JOB NO.

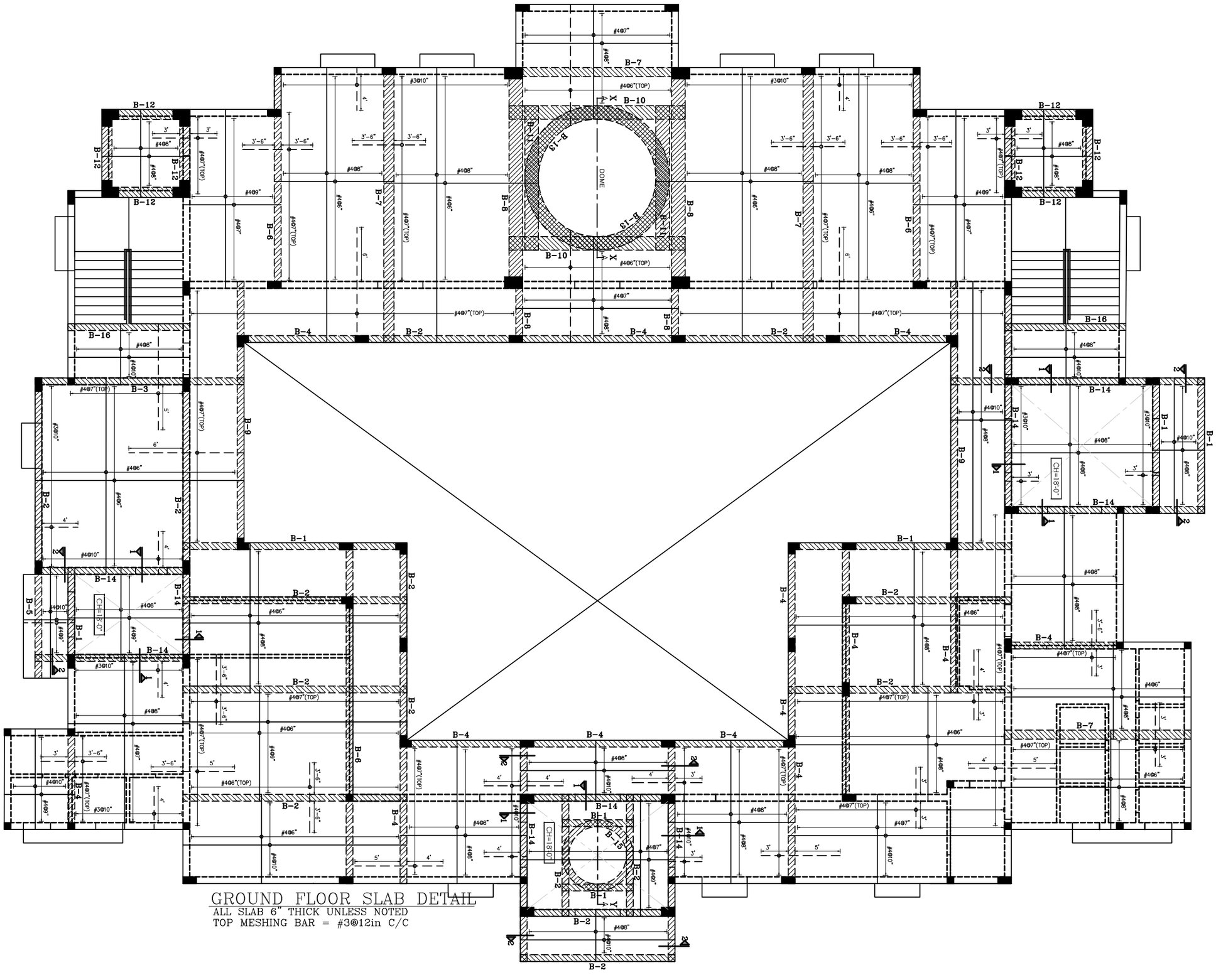

GROUND FLOOR SLAB DETAIL

ALL SLAB 6" THICK UNLESS NOTED
TOP MESHING BAR = #3@12in C/C

TENDER DRAWING

REV.	DATE	DESCRIPTION	APPROVED
04			DRAWN
03			SUBMITTED
02			RECOMMENDED
01			CHD./VER.
			APPROVED

CLIENT:
PUNJAB GOVERNMENT SERVANTS HOUSING FOUNDATION

CONSULTANT:
HA CONSULTING
ARCHITECTS, ENGINEERS & PLANNERS
Address: H # 10-Block D2, First Floor Johar Town, Lahore, Pakistan.
Tel: +92 42 35182103-4
Email: info@haconsulting.co
Web: www.haconsulting.co

PROJECT:
ESTABLISHMENT OF PUNJAB GOVERNMENT SERVANTS HOUSING SCHEME, RAWALPINDI.

TITLE:
REINFORCEMENT PLAN OF RCC SLAB OVER GROUND FLOOR

SCALE: N.T.S

DATE: OCT, 2025

DWG. NO. S001-05

JOB NO.

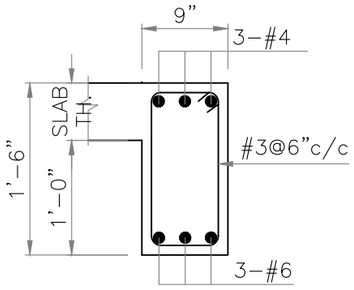

BEAM B-1

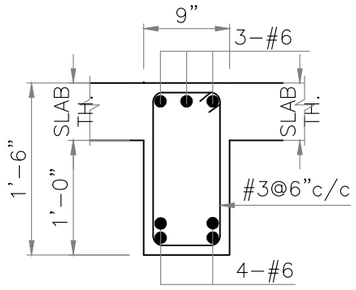

BEAM B-2

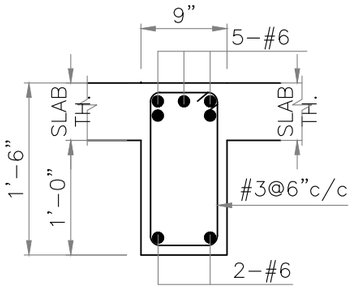

BEAM B-3

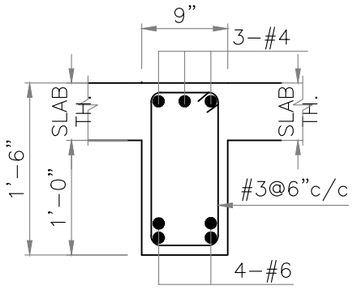

BEAM B-4

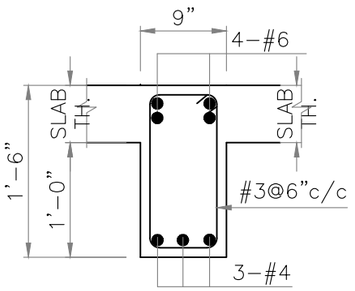

BEAM B-5

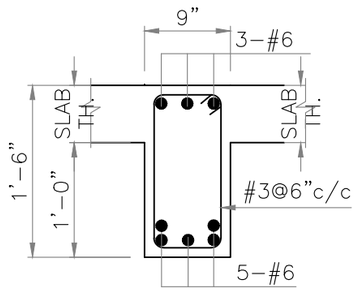

BEAM B-6

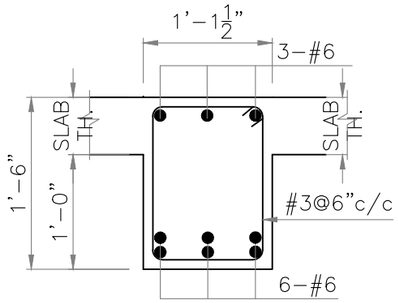

BEAM B-7

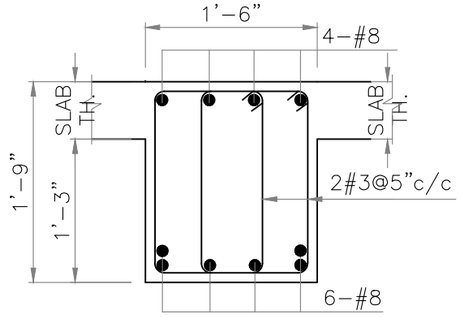

BEAM B-8

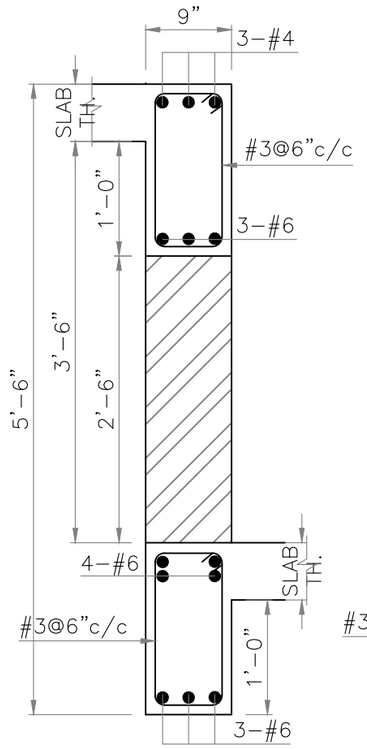

BEAM B-14
(SEC.1-1)

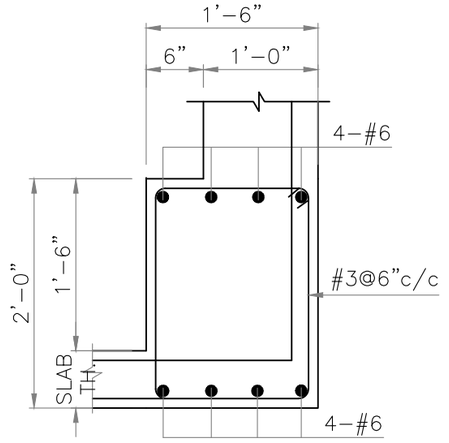

BEAM B-13

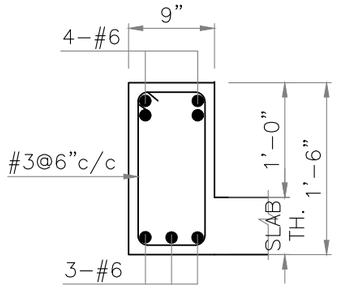

BEAM B-14
(SEC.2-2)

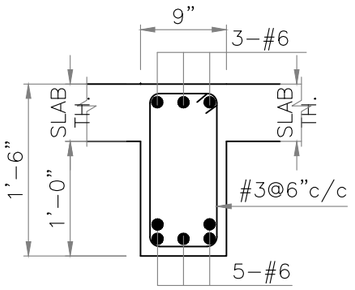

BEAM B-9

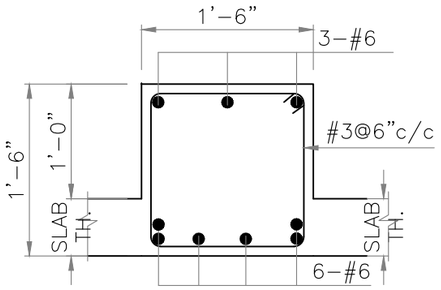

BEAM B-10

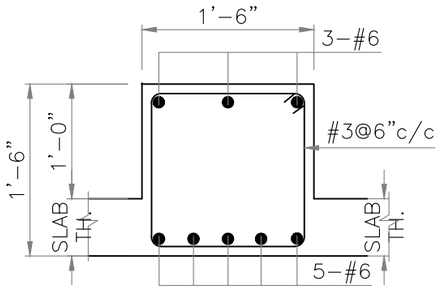

BEAM B-11

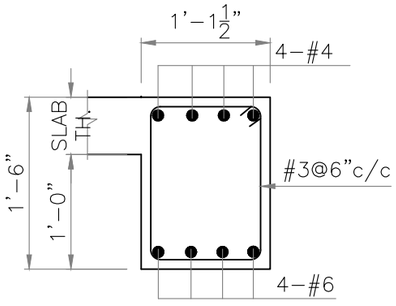

BEAM B-12

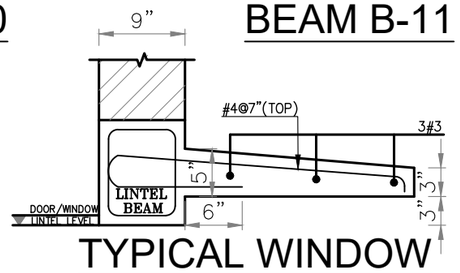

TYPICAL WINDOW
SUNSHADE DETAIL

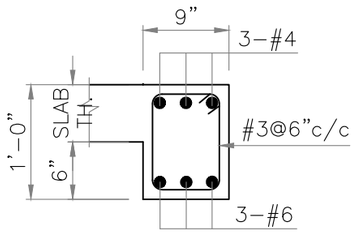

BEAM B-16

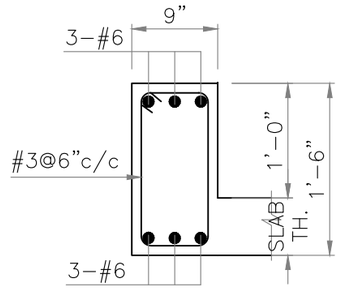

BEAM B-15

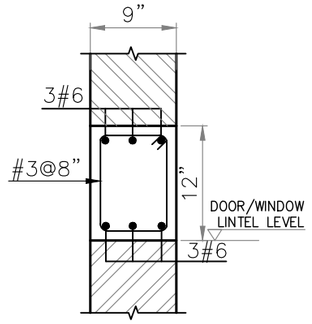

TYPICAL TIE BEAM AT WINDOW LINTEL LEVEL FOR ALL 9” THICK WALLS WHERE LINTEL ARE NOT MARKED

TENDER DRAWING

REV.	DATE	DESCRIPTION	APPROVED
04			DRAWN
03			SUBMITTED
02			RECOMMENDED
01			CHD./VER.
			APPROVED

CLIENT:
PUNJAB GOVERNMENT SERVANTS HOUSING FOUNDATION

CONSULTANT:
HA CONSULTING
ARCHITECTS, ENGINEERS & PLANNERS
Address: H # 10-Block D2, First Floor Johar Town, Lahore, Pakistan.
Tel: +92 42 35182103-4
Email: info@haconsulting.co
Web: www.haconsulting.co

PROJECT:
ESTABLISHMENT OF PUNJAB GOVERNMENT SERVANTS HOUSING SCHEME, RAWALPINDI.

TITLE:
BEAM SECTION DETAIL FOR RCC SLAB GROUND FLOOR

SCALE: N.T.S

DATE: OCT, 2025

DWG. NO. S001–06

JOB NO.

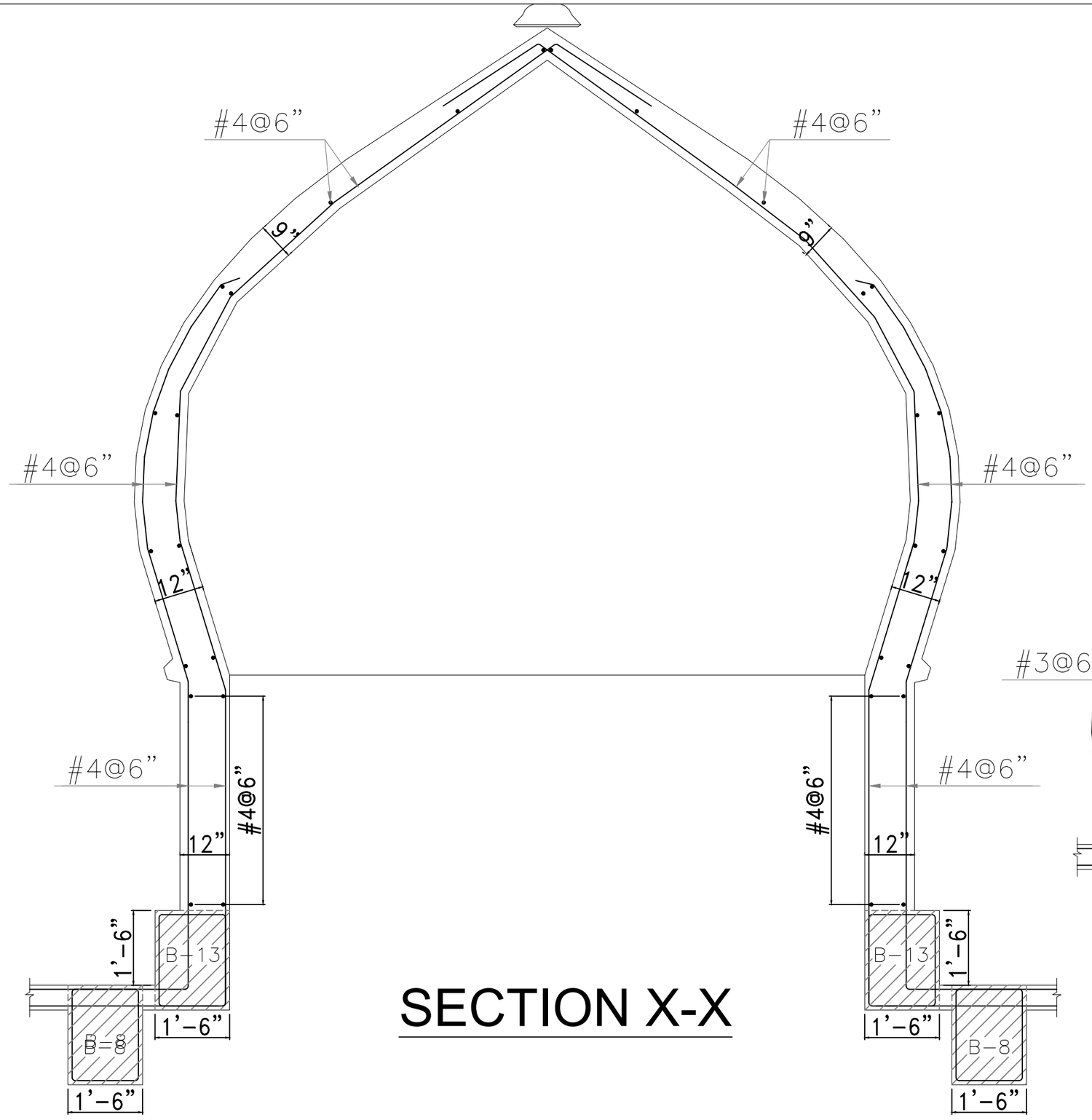

SECTION X-X

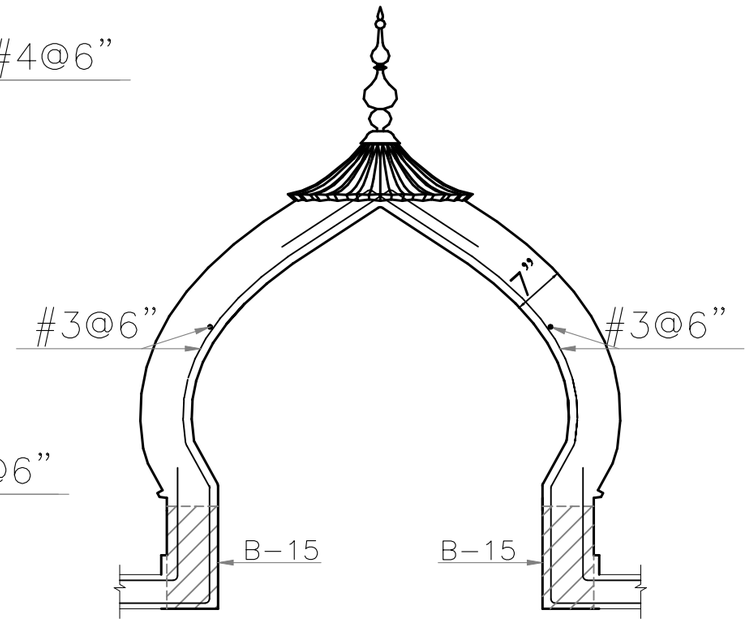

SECTION Y-Y

TENDER DRAWING

REV.	DATE	DESCRIPTION	APPROVED
04			
03			
02			
01			

DRAWN | SUBMITTED | RECOMMENDED | CHD./VER. | APPROVED

CLIENT:
PUNJAB GOVERNMENT SERVANTS HOUSING FOUNDATION

CONSULTANT:
HA CONSULTING
ARCHITECTS, ENGINEERS & PLANNERS
Address: H # 10-Block D2, First Floor Johar Town, Lahore, Pakistan.
Tel: +92 42 35182103-4
Email: info@haconsulting.co
Web: www.haconsulting.co

PROJECT:
ESTABLISHMENT OF PUNJAB GOVERNMENT SERVANTS HOUSING SCHEME, RAWALPINDI.

TITLE: DOME DETAIL

SCALE: N.T.S

DATE: OCT, 2025

DWG. NO. S001–07

JOB NO.

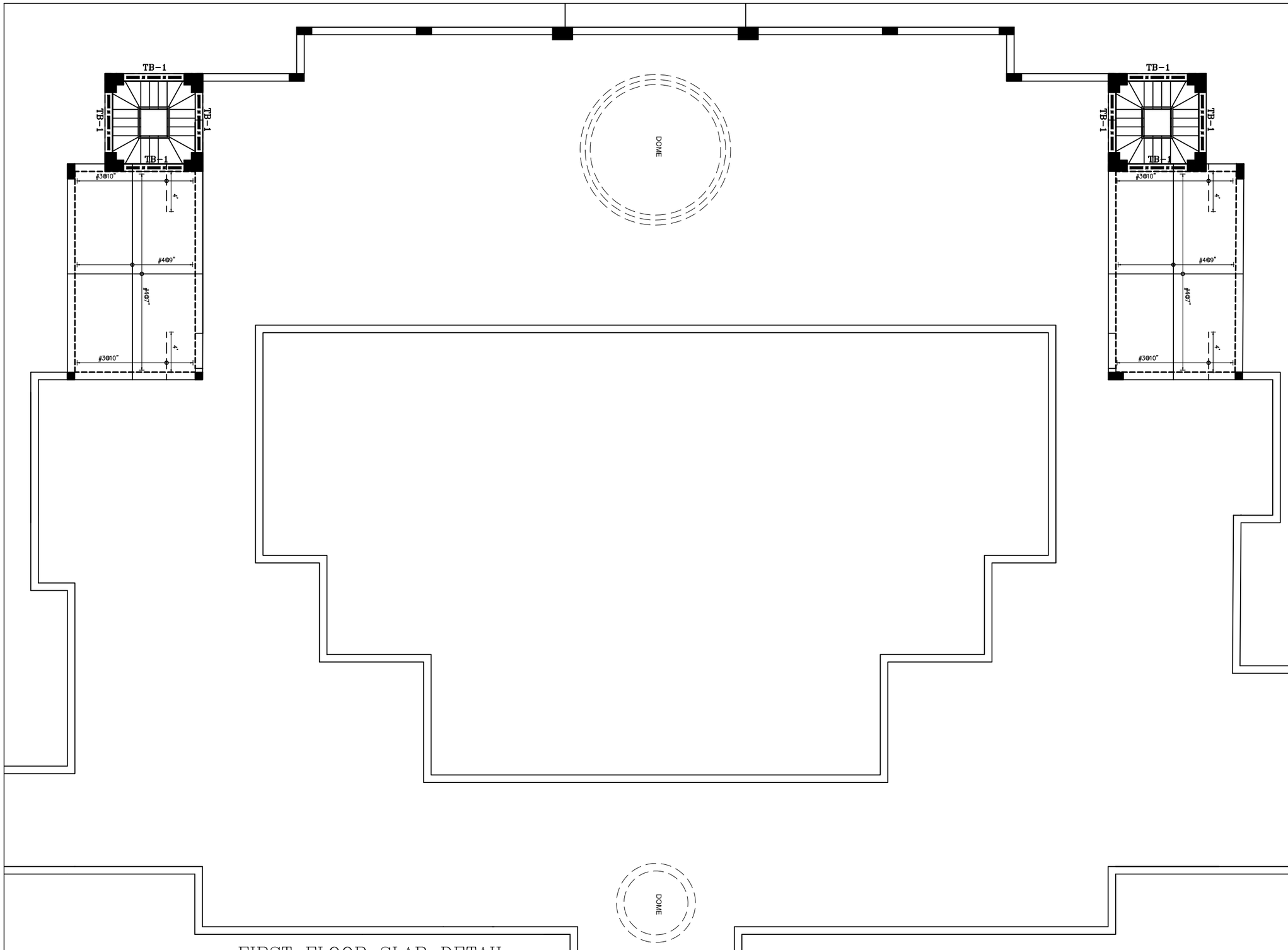

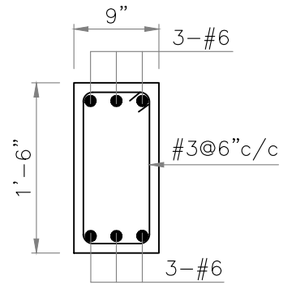

TIE BEAM
TB-1

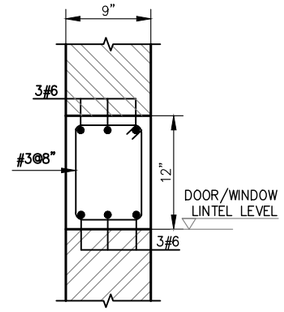

TYPICAL TIE BEAM AT WINDOW LINTEL LEVEL FOR ALL 9" THICK WALLS WHERE LINTEL ARE NOT MARKED

FIRST FLOOR SLAB DETAIL

ALL SLAB 6" THICK UNLESS NOTED
TOP MESHING BAR = #3@12in C/C

TENDER DRAWING

REV.	DATE	DESCRIPTION	APPROVED	APPROVED
04				DRAWN
03				SUBMITTED
02				RECOMMENDED
01				CHD./VER.

CLIENT:
PUNJAB GOVERNMENT SERVANTS HOUSING FOUNDATION

CONSULTANT:
HA CONSULTING
ARCHITECTS, ENGINEERS & PLANNERS
Address: H # 10-Block D2, First Floor Johar Town, Lahore, Pakistan.
Tel: +92 42 35182103-4
Email: info@haconsulting.co
Web: www.haconsulting.co

PROJECT:
ESTABLISHMENT OF PUNJAB GOVERNMENT SERVANTS HOUSING SCHEME, RAWALPINDI.

TITLE:
REINFORCEMENT PLAN OF RCC SLAB OVER MUMMTY

SCALE: N.T.S

DATE: OCT, 2025

DWG. NO. S001–08

JOB NO.

ELECTRICAL DRAWINGS

MOSQUE (RAWALPINDI)

GENERAL NOTES:

A LEGEND.

1 REFER TO LEGEND FOR THOSE SYMBOLS ONLY MENTIONED ON ALL LAYOUT PLANS. OTHER SYMBOLS SHOWN IN LEGEND BUT NOT ACTUALLY SHOWN ON LAYOUT DRAWINGS MAY PLEASE BE IGNORED.

B ELECTRICAL WORKS.

1 THE FOLLOWING NOTES SHALL IN GENERAL APPLY TO ALL ELECTRICAL DRAWINGS. THE INSTRUCTIONS IN THESE NOTES SHALL BE FOLLOWED UNLESS STATED OTHERWISE.

ALL ELECTRICAL WORKS PERTAINING TO WIRING OF ELECTRICAL SYSTEMS SHALL STRICTLY CONFORM TO I.E.E LATEST EDITION OF RULES & REGULATIONS.

2 ELECTRICAL DRAWINGS

ALL ELECTRICAL DRAWINGS SHALL BE READ IN CONJUNCTION WITH BOQ, TECHNICAL SPECIFICATIONS AND IN CO-ORDINATION WITH ARCHITECTURAL, STRUCTURAL, PLUMBING AND HVAC DRAWINGS.

3 DIMENSIONS ON ELECTRICAL LAYOUT PLANS

ALL DIMENSIONS IF SHOWN ON THE ELECTRICAL LAYOUT PLANS ARE APPROXIMATE. THE ELECTRICAL CONTRACTOR SHALL BE RESPONSIBLE TO DO ALL NECESSARY CALCULATIONS TO ARRIVE AT THE ACTUAL DIMENSIONS/MEASUREMENTS IN CO-ORDINATION WITH ALL OTHER RELEVANT DRAWINGS OF OTHER SERVICES.

4 SHOP DRAWINGS

THE ELECTRICAL CONTRACTOR SHALL PREPARE ELECTRICAL SHOP DRAWINGS WITH ALL NECESSARY RELEVANT DETAILS. THE SHOP DRAWINGS SHALL BE SUBMITTED TO ENGINEER FOR APPROVAL BEFORE THE COMMENCEMENT OF ANY WORKS AT SITE.

5 CO-ORDINATION

THE ELECTRICAL CONTRACTOR SHALL DO ALL NECASSARY CO-ORDINATION OF ELECTRICAL WORKS AND ALLIED SYSTEMS WITH ALL OTHER SERVICES AT SITE.

6 BALANCING OF ELECTRICAL LOADS

ELECTRICAL LOADS ON ALL 3 PHASES SHALL BE BALANCED ON THE ELECTRICAL WORKS AT THE TIME OF TESTING AND COMMISSIONING OF THE ELECTRICAL INSTALLATIONS.

7 ELECTRICAL WIRING.

ALL WIRING SHALL BE DONE IN PVC CONDUIT TO BE CONCEALED IN WALLS,SLABS,COLUMNS AND FLOORS OR AS SHOWN ON DRAWINGS.

8 THE WIRING SHOULD BE STARTED ONLY AFTER THE CONDUIT SYSTEM HAS BEEN COMPLETED AND ALL OUTLET BOXES ARE FIXED AT THEIR RESPECTIVE POSITIONS.

9 PVC CONDUITS.

ALL PVC CONDUIT SHALL BE OF 3/4" OR 1" DIA (DEPENDING UPON NUMBER OF WIRES) FROM SWITCH BOARD TO LIGHT POINTS & 1" DIA FROM DBs TO SWITCH BOARDS AND POWER SOCKETS OR AS SHOWN ON DRAWINGS.

10 LUBRICATION.

NO LUBRICATION EXCEPT AS RECOMMENDED BY MANUFACTURER SHALL BE USED FOR PULLING OF WIRES IN PVC CONDUITS.
NO OIL OF ANY KIND SHALL BE USED.

11 COLOUR CODING

COLOUR CODING FOR WIRING SHALL BE AS FOLLOWS: RED,YELLOW AND BLUE FOR PHASES, BLACK FOR NEUTRAL AND GREEN/YELLOW FOR EARTH

12 SIZE OF WIRES

FOLLOWING SIZES OF PVC INSULATED WIRES WITH COPPER CONDUCTORS SHALL BE USED FOR INTERNAL WIRING,UNLESS STATED OTHERWISE.

12.1 2.5mm sq PVC INSULATED WIRES SHALL BE USED FROM SWITCH BOARD TO LIGHT POINTS OR AS SPECIFIED IN B.O.Q

12.2 MAXIMUM 12 TO 14 NOs. OF 40W LIGHTS SHALL BE ENERGIZED FROM 1 CIRCUIT.

12.3 2.5mm sq PVC INSULATED WIRES SHALL BE USED FROM DB TO SWITCH BOARDS FOR LIGHTING CIRCUITS.

12.4 4mm sq OR 6mm sq PVC INSULATED WIRES OR AS SHOWN ON DRAWING/BOQ SHALL BE USED FOR WIRING FROM DB TO POWER SOCKETS.

12.5 MAXIMUM 3 NOs. OF POWER SOCKETS SHALL BE LOOPED FROM 1 CIRCUIT.

12.6 BACK BOXES

ALL BACK BOXES FOR SWITCHES & SOCKETS SHALL MADE OF G.I SHEET 16SWG OR AS SPECIFIED IN BOQ WITH EARTH TERMINAL. SIZE OF BACK BOX SHALL CORRESPOND TO THE SIZE OF SWITCHES/SOCKETS.

13 EARTHING OF POINTS.

ALL ELECTRICAL AND POWER SOCKETS SHALL BE PROPERLY EARTHED WITH 2.5mm sq PVC INSULATED WIRES OF COLOUR GREEN-YELLOW.

14 CAPACITY OF CONDUITS.

THE NUMBER OF WIRES TO BE PULLED IN ANY CONDUIT FOR WIRING PURPOSES SHALL CONFORM TO I.E.E RULES & REGULATIONS

15 CONDUIT FOR LIGHT WIRING.

WIRING SHALL BE DONE IN 3/4" & 1" DIA PVC CONDUIT FOR LIGHT POINTS AND CIRCUIT WIRING ON NORMAL/ GENERATOR SUPPLY OR AS SPECIFIED IN BOQ OR AS SHOWN ON DRAWINGS.

16 DISTRIBUTION BOARDS "LIGHT" & "POWER"

ALL DISTRIBUTION BOARDS SHOWN ON DRAWINGS SHALL BE CONCEALED IN WALL & INSTALLED AT 4FT (1000mm) F.F.L OR AS SHOWN IN LEGEND/DRAWINGS.

17 CONDUTING LAYOUT PLAN

ALL CONDUTING LAYOUT PLANS ARE FOR GENERAL PURPOSE, HOWEVER, CONTRACTOR SHALL SUBMIT SHOP DRAWINGS OF CONDUTING LAYOUT BEFORE BEFORE POURING OF SLAB/COLUMN

19 POWER SOCKET SHELL BE INSTALLED ON WALL AT THE HEIGHT OF 9" FROM F.F.L.

20 ALL LIGHTS SHELL BE INSTALLED AT THE HEIGHT OF CEILING (AS MENTIONED IN ARCHITECTURAL DRAWINGS) OR AS PER SITE REQUIREMENTS

21 ALL PANELS / DBs PLACED OUTSIDE THE BUILDING SHALL BE OUTDOOR TYPE (WATER TIGHT)

22 LOCATION OF DBs AND PANELS SHOWN ON DRAWINGS ARE TENTATIVE. ACTUAL LOCATION SHALL BE FINALIZED AT SITE CONDITIONS AND AVAILABILITY OF WAPDA CONNECTIONS.

B ELECTRICAL CONSULATANT.

1 ELECTRICAL CONTRACTOR TO CONSULT ELECTRICAL CONSULTANT/ENGINEER FOR ANY FURTHER CLARIFICATIONS. NO ASSUMPTIONS SHOULD BE MADE.

C CLOSE CIRCUIT TV JUNCTION BOX (CCJB).

1 M.S JUNCTION BOX 4"x7"x4" 16 SWG WITH COVER CONCEALED IN WALL AT 9" BELOW SLAB TO FACILITATE PULLING OF CLOSE CIRCUIT TV CABLES.

D OTHER SYSTEMS.

1 1" DIA PVC CONDUIT SHALL BE USED FOR WIRING OF ALL OTHER SYSTEMS UNLESS OTHERWISE MENTIONED ON PLANS OR AS SPECIFIED IN B.O.Q

CAPACITY OF PVC CONDUITS

S.NO	CAPACITY OF CONDUITS			MAXIMUM NUMBER OF CABLES IN PVC CONDUITS SIZES		
1	NOMINAL CONDUCTOR SIZE-mmSq	NO & DIA OF WIRES	OVER ALL DIAMETER	3/4" DIA (20mm DIA)	1" DIA (25mm DIA)	1-1/4" DIA (32mm DIA)
2	1.5	1/1.38	3.1	10	18	30
3	2.5	1/1.78	3.5	8	14	23
4	2.5	7/0.67	3.8	7	12	20
5	4	7/0.85	4.3	5	9	15
6	10	7/1.04	4.9	4	7	12
7	16	7/1.35	6.2	2	4	7
8	16	7/1.78	7.3	–	3	5
9	25	7/2.14	9.0	–	2	3
10	35	19/1.53	10.3	–	–	2

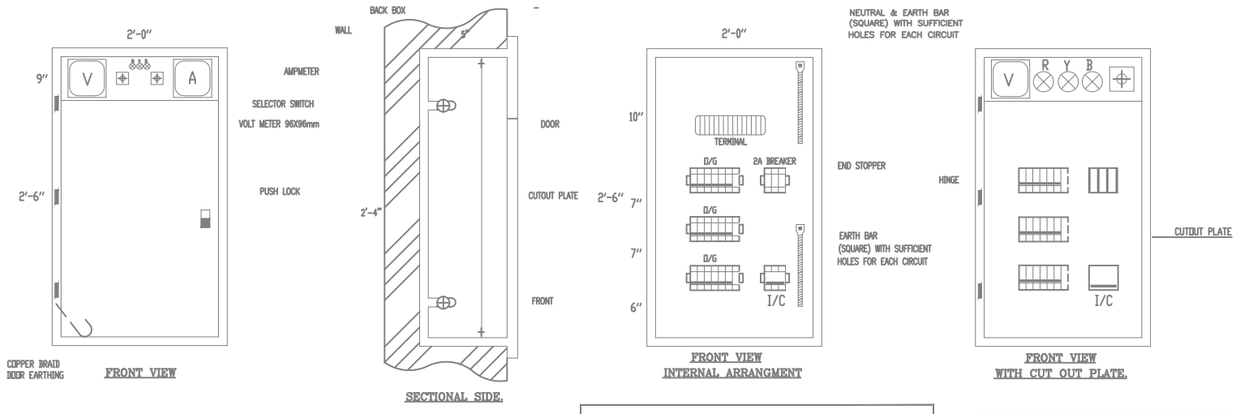

TENTATIVE CONSTRUCTIONAL DETAIL OF:- DISTRIBUTION BOARD (DB) RECESSED TYPE.

NOTE:-
ACTUAL SHOP DRAWING OF DB'S TO BE SUBMITTED BY CONTRACTOR TO CONSULTANT FOR APPROVAL

TENDER DRAWING

REV.	DATE	DESCRIPTION	APPROVED	APPROVED
04				DRAWN
03				SUBMITTED
02				RECOMMENDED
01				CHD./VER.

CLIENT:
PUNJAB GOVERNMENT SERVANTS HOUSING FOUNDATION

CONSULTANT:
HA CONSULTING
ARCHITECTS, ENGINEERS & PLANNERS
Address: H # 10-Block D2, First Floor Johar Town, Lahore, Pakistan.
Tel: +92 42 35182103-4
Email: info@haconsulting.co
Web: www.haconsulting.co

PROJECT:
ESTABLISHMENT OF PUNJAB GOVERNMENT SERVANTS HOUSING SCHEME AT RAWALPINDI. (JAMIA MOSQUE)

TITLE:
GENERAL NOTES & DETAIL

SCALE: N.T.S

DATE: FEB, 2026

DWG. NO. E000

JOB NO. HAC-___

LEGENDS

Sr.No.	NAME & DESCRIPTION	SYMBOL
1.	LED DOWNLIGHT 12W 6"	
2.	WATER TIGHT LIGHT	
3.	18W WALL MOUNTED LIGHT	
4.	SWITCH BOARD	
5.	EXHAUST FAN	
6.	CEILING FAN 56"	
7.	WALL BRACKET FAN	
8.	LIGHT PLUG 13A	
9.	FLOOR STANDING UNIT (4 TON)	
10.	1.5 TON AC UNIT	
11.	2 TON AC UNIT	
12.	LIGHTING, POWER DISTRIBUTION BOARD (LPDB)	
13.	DOME IP CAMERA	
14.	OUTDOOR PTZ IP CAMERA	
15.	BULLET IP CAMERA	
16.	NETWORK VIDEO RECORDER	NVR
17.	MICROPHONE	
18.	COLUMN SPEAKER	
19.	MINAR SPEAKER	
20.	AMPLIFIER	AMP

TENDER DRAWING

REV.	DATE	DESCRIPTION	APPROVED	APPROVED
04				DRAWN
03				SUBMITTED
02				RECOMMENDED
01				CHD./VER.

CLIENT:
PUNJAB GOVERNMENT SERVANTS HOUSING FOUNDATION
PGSHF

CONSULTANT:
HA CONSULTING
ARCHITECTS, ENGINEERS & PLANNERS
Address: H # 10-Block D2, First Floor Johar Town, Lahore, Pakistan.
Tel: +92 42 35182103-4
Email: info@haconsulting.co
Web: www.haconsulting.co

PROJECT:
ESTABLISHMENT OF PUNJAB GOVERNMENT SERVANTS HOUSING SCHEME AT RAWALPINDI. (JAMIA MOSQUE)

TITLE: LEGEND

SCALE: N.T.S

DATE: FEB, 2026

DWG. NO. E000-0

JOB NO. HAC-____

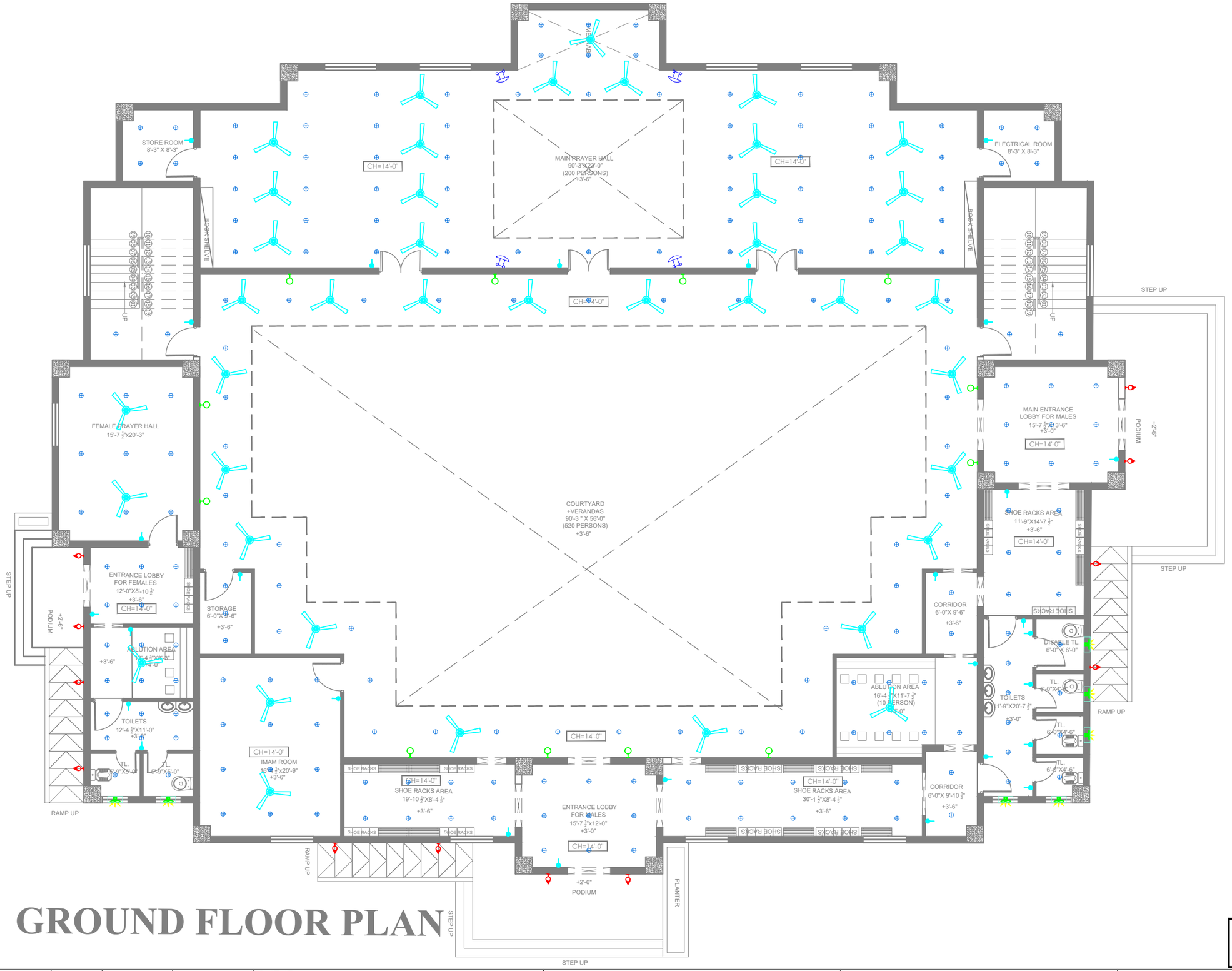

GROUND FLOOR PLAN

TENDER DRAWING

REV.	DATE	DESCRIPTION	APPROVED	APPROVED	
04				DRAWN	
03				SUBMITTED	
02				RECOMMENDED	
01				CHD./VER.	

CLIENT:

PUNJAB GOVERNMENT SERVANTS HOUSING FOUNDATION

CONSULTANT:

HA CONSULTING
ARCHITECTS, ENGINEERS & PLANNERS

Address: H # 10-Block D2, First Floor Johar Town, Lahore, Pakistan.
Tel: +92 42 35182103-4
Email: info@haconsulting.co
Web: www.haconsulting.co

PROJECT:

ESTABLISHMENT OF PUNJAB GOVERNMENT SERVANTS HOUSING SCHEME AT RAWALPINDI. (JAMIA MOSQUE)

TITLE: LIGHTING LAYOUT PLAN

SCALE: N.T.S

DATE: FEB, 2026

DWG. NO. E001–01

JOB NO. HAC–___

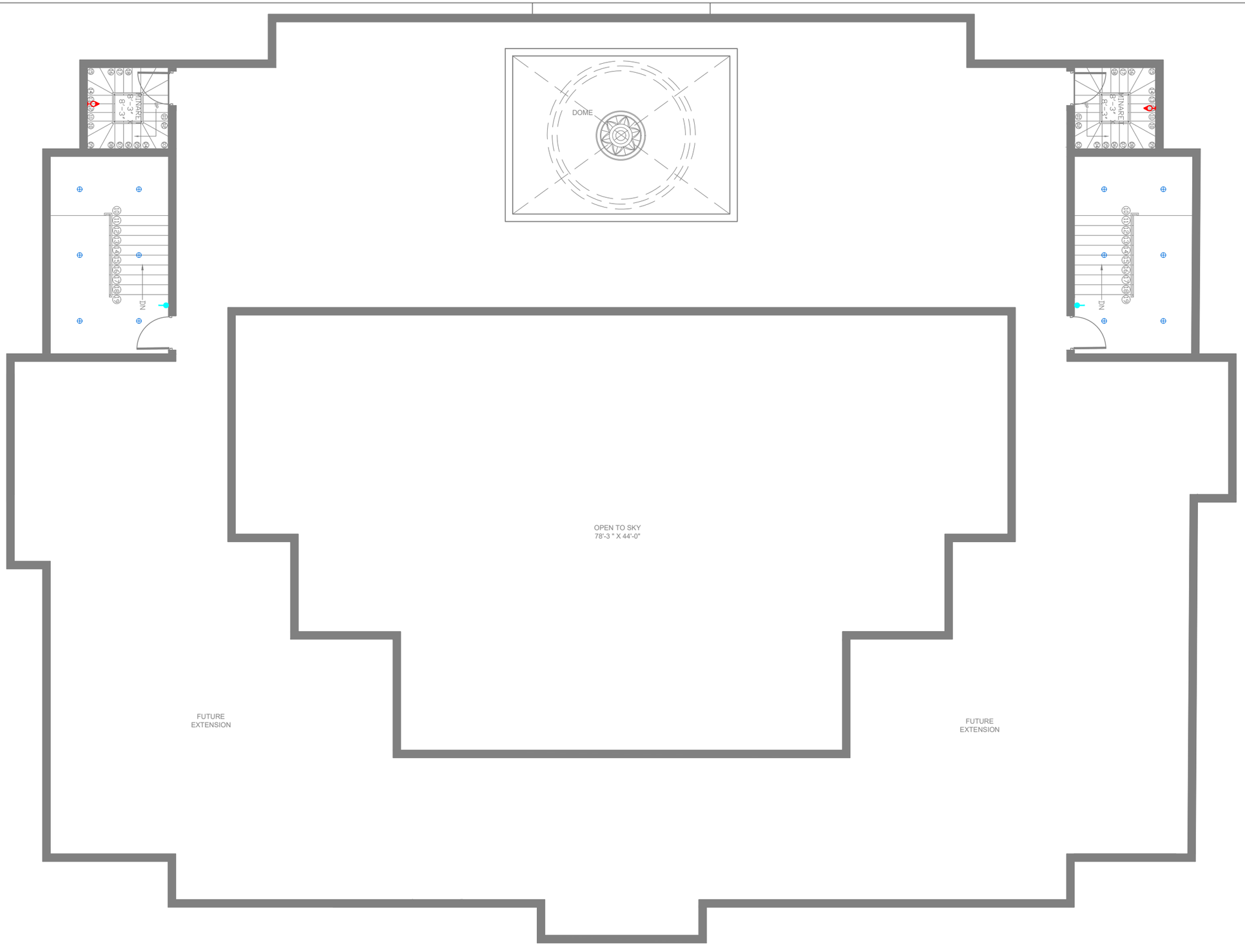

ROOF TOP FLOOR PLAN

TENDER DRAWING

REV.	DATE	DESCRIPTION	APPROVED	APPROVED
04				DRAWN
03				SUBMITTED
02				RECOMMENDED
01				CHD./VER.

CLIENT:
PUNJAB GOVERNMENT SERVANTS HOUSING FOUNDATION
PGSHF

CONSULTANT:
HA CONSULTING
ARCHITECTS, ENGINEERS & PLANNERS
Address: H # 10-Block D2, First Floor Johar Town, Lahore, Pakistan.
Tel: +92 42 35182103-4
Email: info@haconsulting.co
Web: www.haconsulting.co

PROJECT:
ESTABLISHMENT OF PUNJAB GOVERNMENT SERVANTS HOUSING SCHEME AT RAWALPINDI.
(JAMIA MOSQUE)

TITLE:
LIGHTING LAYOUT PLAN

SCALE: N.T.S

DATE: FEB, 2026

DWG. NO. E001–02

JOB NO. HAC–___

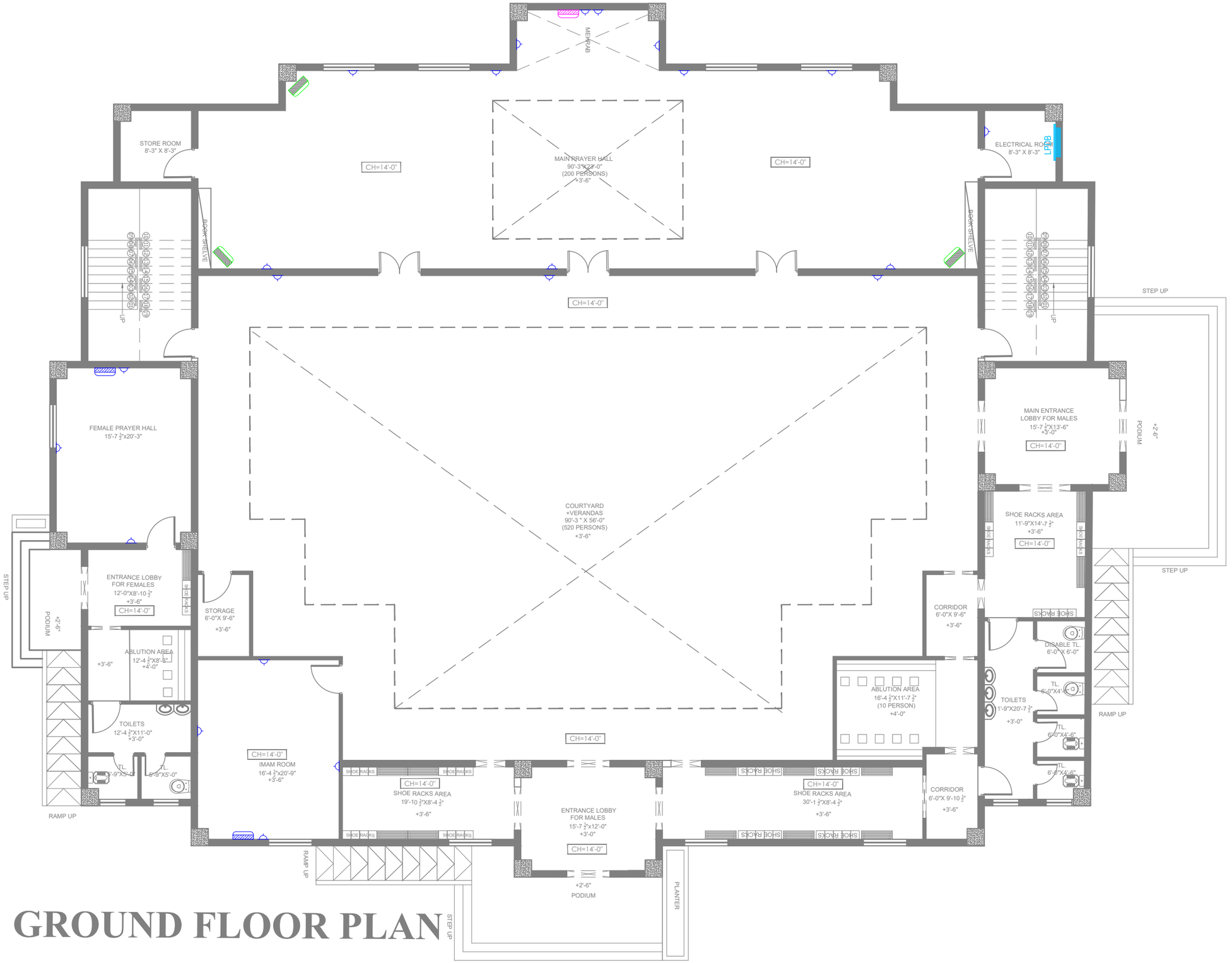

GROUND FLOOR PLAN

TENDER DRAWING

REV.	DATE	DESCRIPTION	APPROVED	APPROVED
04				DRAWN
03				SUBMITTED
02				RECOMMENDED
01				CHD./VER.

CLIENT:

PUNJAB GOVERNMENT SERVANTS HOUSING FOUNDATION

CONSULTANT:

HA CONSULTING
ARCHITECTS, ENGINEERS & PLANNERS

Address: H # 10-Block D2, First Floor Johar Town, Lahore, Pakistan.
Tel: +92 42 35182103-4
Email: info@haconsulting.co
Web: www.haconsulting.co

PROJECT:

ESTABLISHMENT OF PUNJAB GOVERNMENT SERVANTS HOUSING SCHEME AT RAWALPINDI.
(JAMIA MOSQUE)

TITLE: POWER LAYOUT PLAN

SCALE: N.T.S

DATE: FEB, 2026

DWG. NO. E002-01

JOB NO. HAC-___

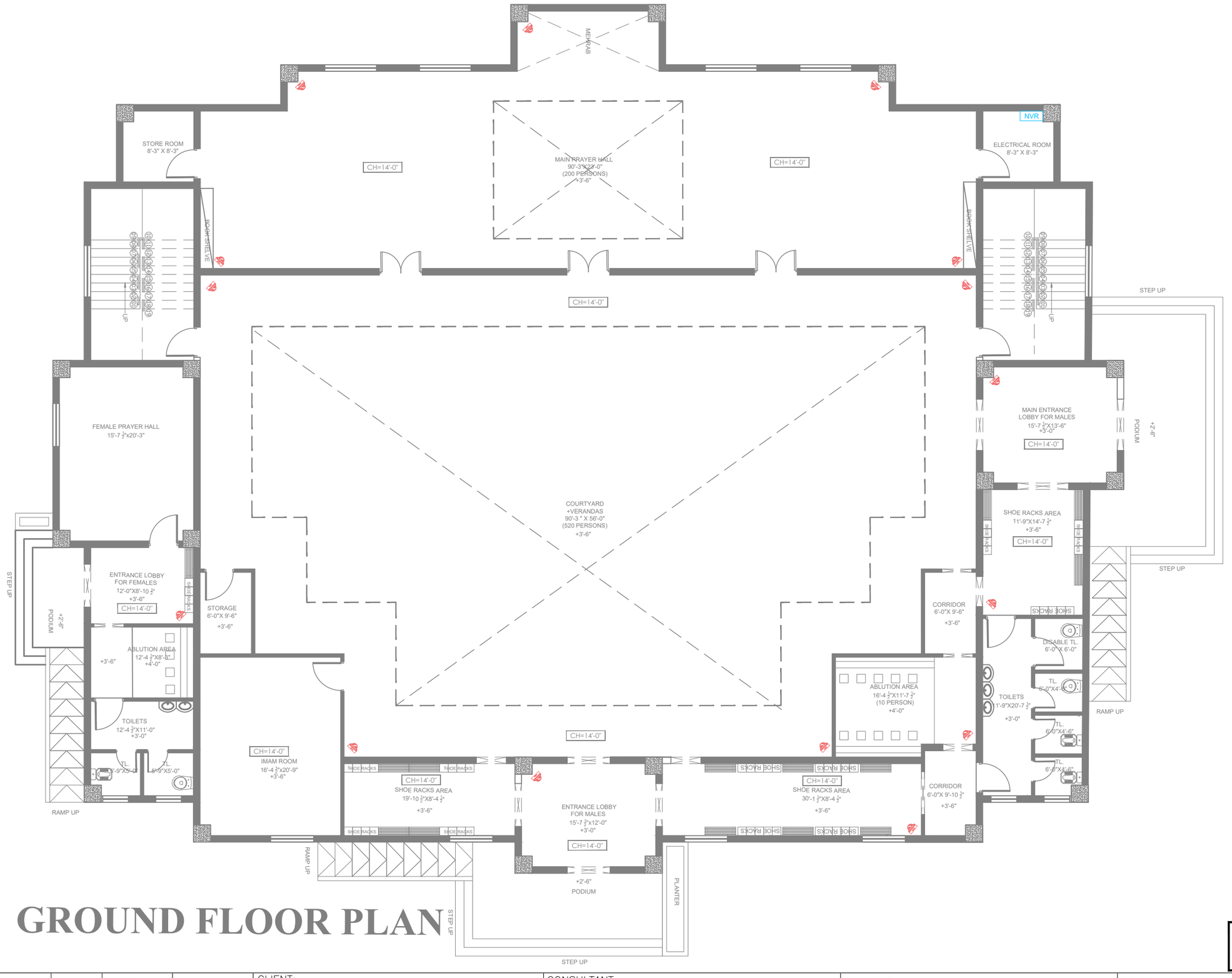

GROUND FLOOR PLAN

TENDER DRAWING

REV.	DATE	DESCRIPTION	APPROVED	APPROVED
04				DRAWN
03				SUBMITTED
02				RECOMMENDED
01				CHD./VER.

CLIENT:

PUNJAB GOVERNMENT SERVANTS HOUSING FOUNDATION

CONSULTANT:

HA CONSULTING
ARCHITECTS, ENGINEERS & PLANNERS

Address: H # 10-Block D2, First Floor Johar Town, Lahore, Pakistan.
Tel: +92 42 35182103-4
Email: info@haconsulting.co
Web: www.haconsulting.co

PROJECT:

ESTABLISHMENT OF PUNJAB GOVERNMENT SERVANTS HOUSING SCHEME AT RAWALPINDI. (JAMIA MOSQUE)

TITLE: CCTV SYSTEM LAYOUT PLAN

SCALE: N.T.S

DATE: FEB, 2026

DWG. NO. E003-01

JOB NO. HAC-___

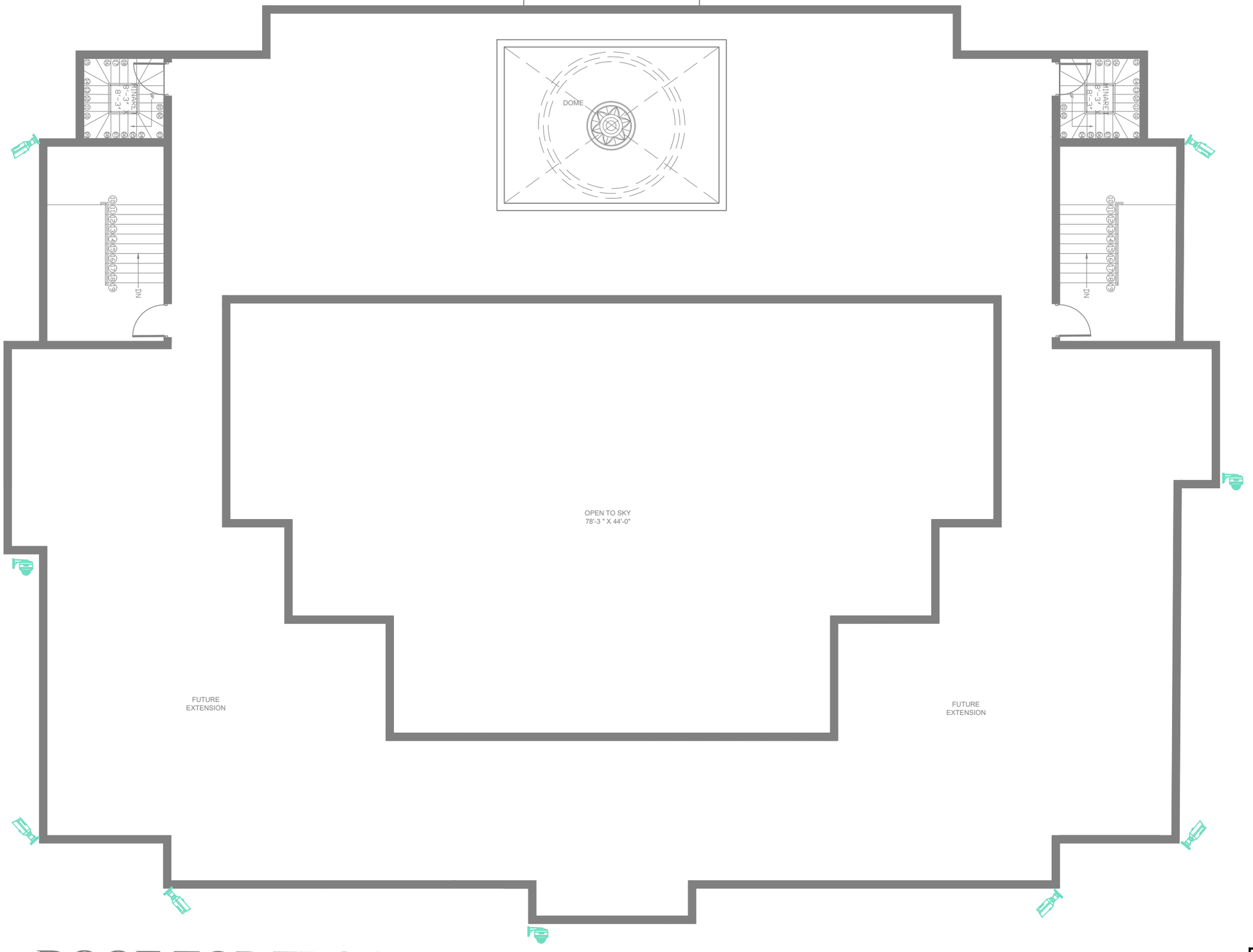

ROOF TOP FLOOR PLAN

TENDER DRAWING

REV.	DATE	DESCRIPTION	APPROVED	APPROVED
04				DRAWN
03				SUBMITTED
02				RECOMMENDED
01				CHD./VER.

CLIENT:
PUNJAB GOVERNMENT SERVANTS HOUSING FOUNDATION
PGSHF

CONSULTANT:
HA CONSULTING
ARCHITECTS, ENGINEERS & PLANNERS
Address: H # 10-Block D2, First Floor Johar Town, Lahore, Pakistan.
Tel: +92 42 35182103-4
Email: info@haconsulting.co
Web: www.haconsulting.co

PROJECT:
ESTABLISHMENT OF PUNJAB GOVERNMENT SERVANTS HOUSING SCHEME AT RAWALPINDI. (JAMIA MOSQUE)

TITLE: CCTV SYSTEM LAYOUT PLAN

SCALE: N.T.S

DATE: FEB, 2026

DWG. NO. E003-02

JOB NO. HAC-___

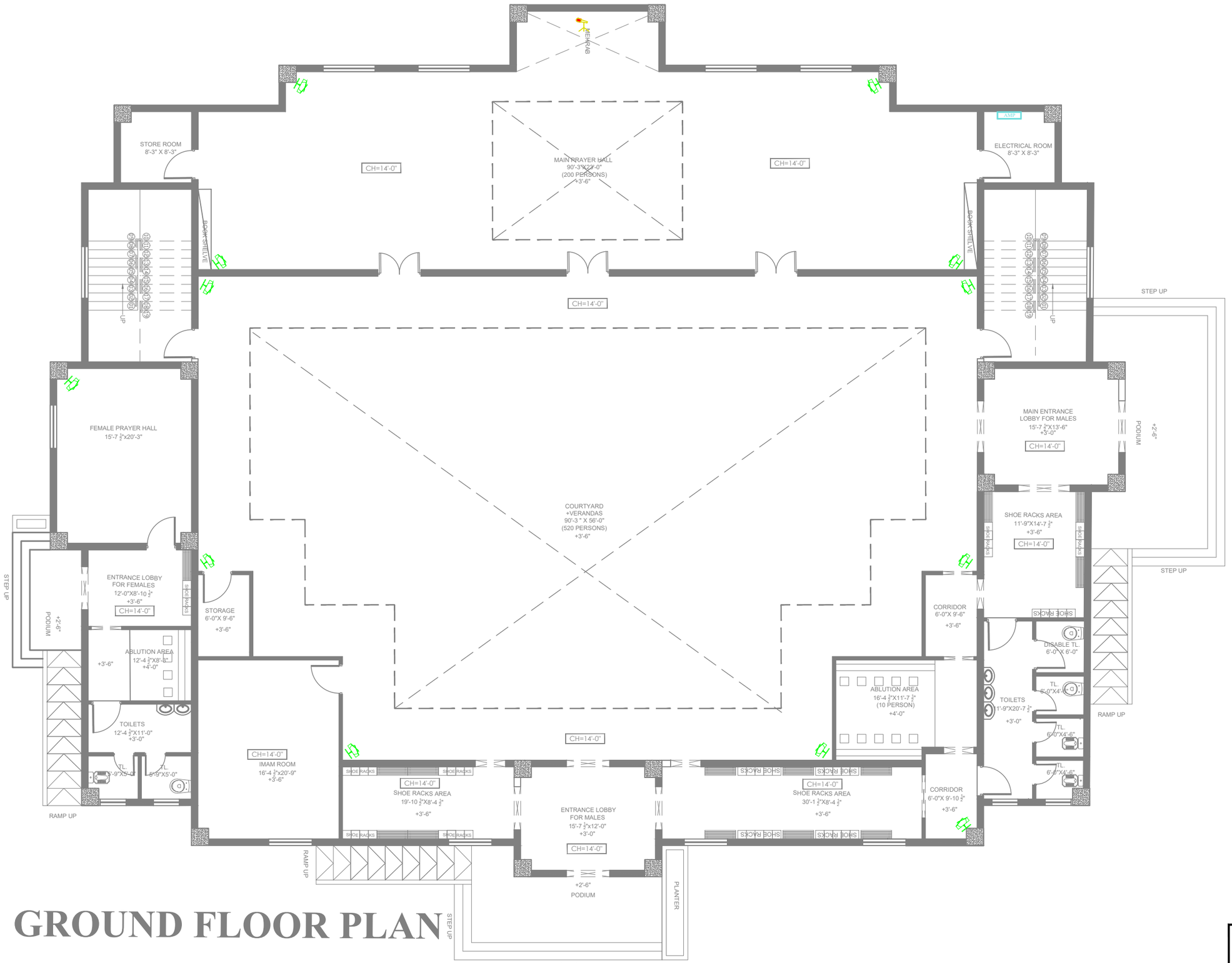

GROUND FLOOR PLAN

TENDER DRAWING

REV.	DATE	DESCRIPTION	APPROVED	APPROVED
04				DRAWN
03				SUBMITTED
02				RECOMMENDED
01				CHD./VER.

CLIENT:

PUNJAB GOVERNMENT SERVANTS HOUSING FOUNDATION

CONSULTANT:

HA CONSULTING
ARCHITECTS, ENGINEERS & PLANNERS

Address: H # 10-Block D2, First Floor Johar Town, Lahore, Pakistan.
Tel: +92 42 35182103-4
Email: info@haconsulting.co
Web: www.haconsulting.co

PROJECT:

ESTABLISHMENT OF PUNJAB GOVERNMENT SERVANTS HOUSING SCHEME AT RAWALPINDI.
(JAMIA MOSQUE)

TITLE: PUBLIC ADDRESS SYSTEM LAYOUT PLAN

SCALE: N.T.S

DATE: FEB, 2026

DWG. NO. E004-01

JOB NO. HAC-___

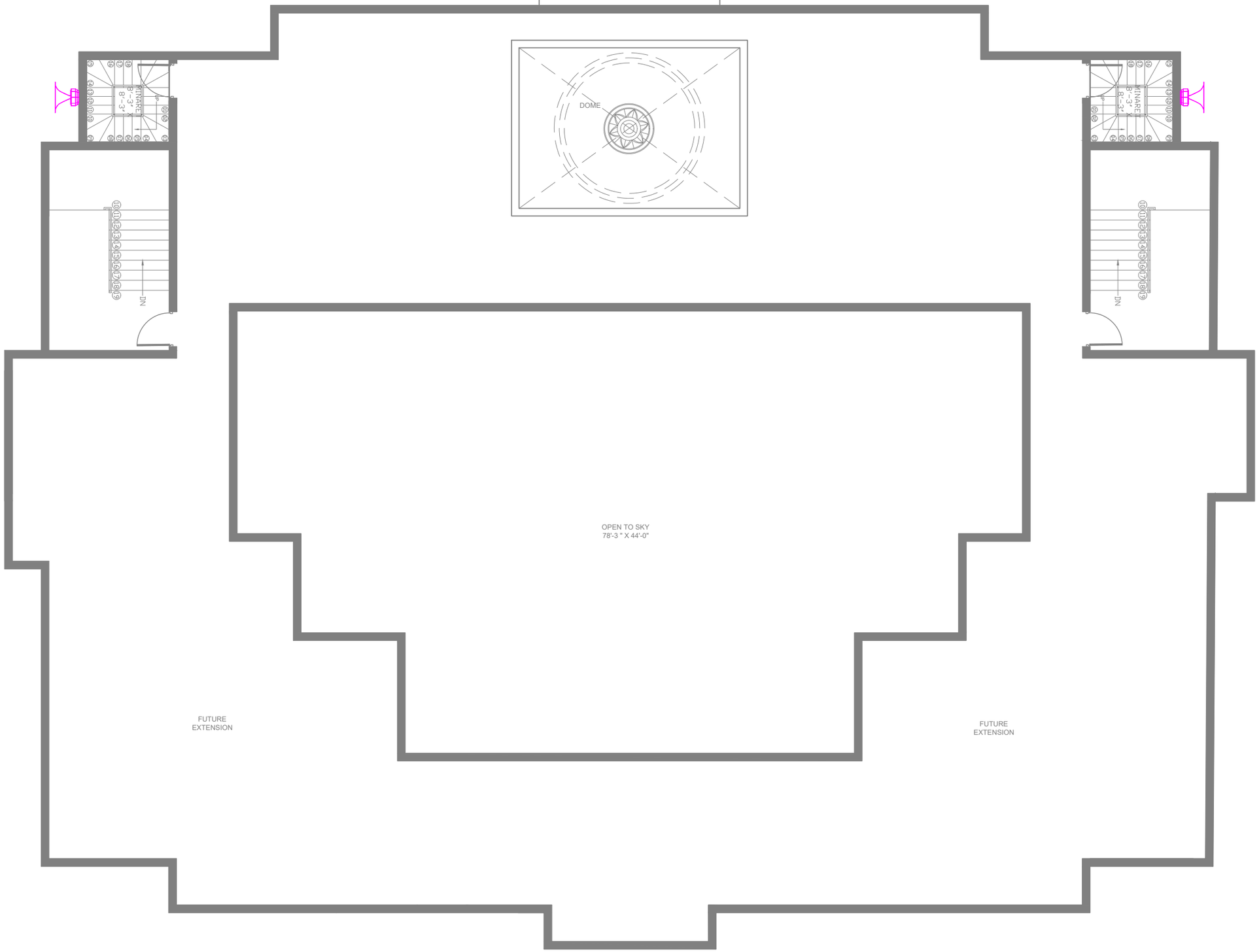

ROOF TOP FLOOR PLAN

TENDER DRAWING

REV.	DATE	DESCRIPTION	APPROVED	APPROVED
04				DRAWN
03				SUBMITTED
02				RECOMMENDED
01				CHD./VER.

CLIENT:
PUNJAB GOVERNMENT SERVANTS HOUSING FOUNDATION

CONSULTANT:
HA CONSULTING
ARCHITECTS, ENGINEERS & PLANNERS
Address: H # 10-Block D2, First Floor Johar Town, Lahore, Pakistan.
Tel: +92 42 35182103-4
Email: info@haconsulting.co
Web: www.haconsulting.co

PROJECT:
ESTABLISHMENT OF PUNJAB GOVERNMENT SERVANTS HOUSING SCHEME AT RAWALPINDI.
(JAMIA MOSQUE)

TITLE:
PUBLIC ADDRESS SYSTEM LAYOUT PLAN

SCALE: N.T.S

DATE: FEB, 2026

DWG. NO. E004-02

JOB NO. HAC-___

PUBLIC HEALTH DRAWINGS
(JAMIA MOSQUE, PGSHF RAWALPINDI)

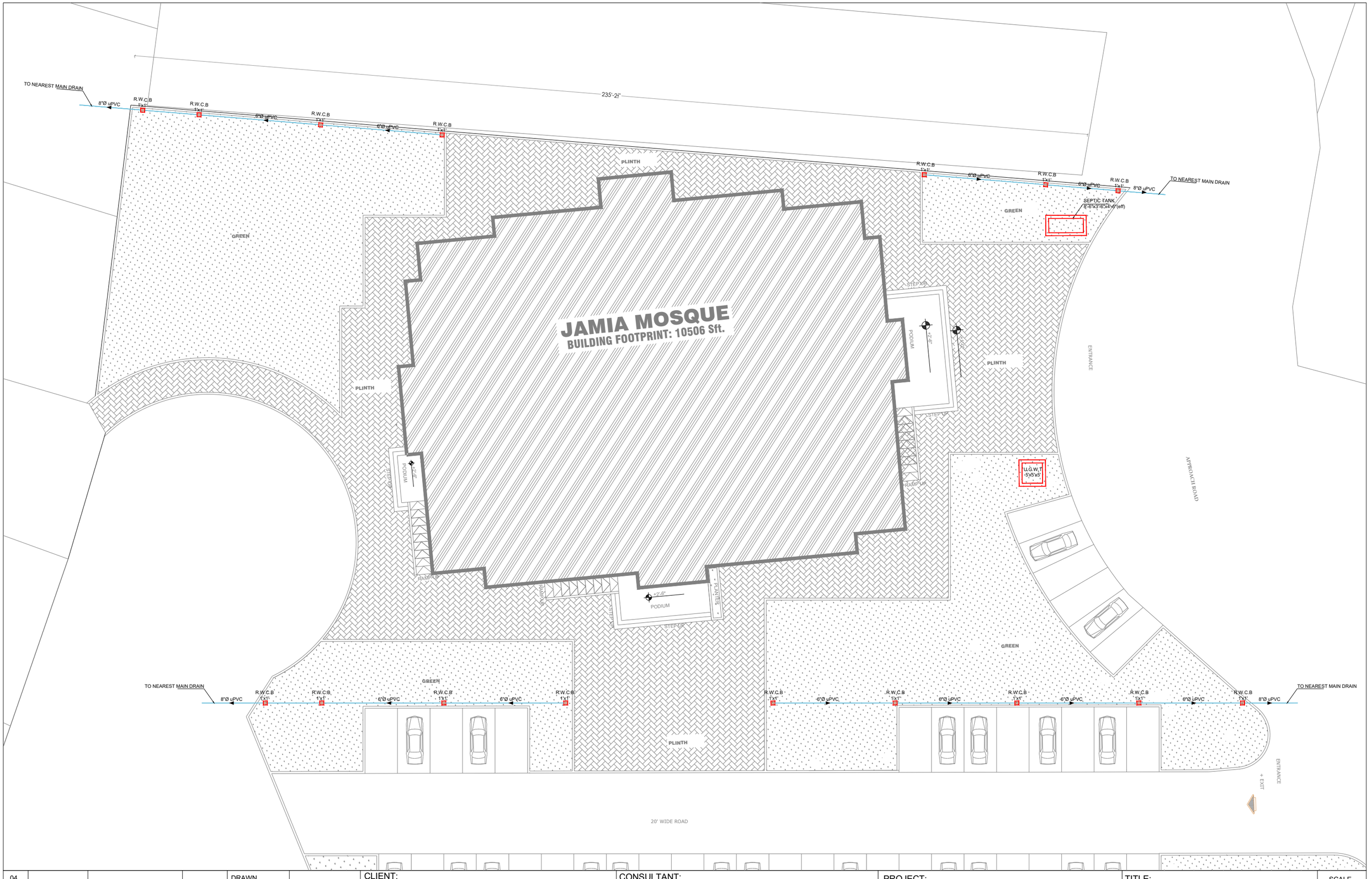

REV.	DATE	DESCRIPTION	APPROVED		
04				DRAWN	
03				SUBMITTED	
02				RECOMMENDED	
01				CHD./VER.	

CLIENT:

PUNJAB GOVERNMENT SERVANTS HOUSING FOUNDATION

CONSULTANT:

HA CONSULTING
ARCHITECTS, ENGINEERS & PLANNERS
Address: H # 10-Block D2, First Floor Johar Town, Lahore, Pakistan.
Tel: +92 42 35182103-4
Email: info@haconsulting.co
Web: www.haconsulting.co

PROJECT:

ESTABLISHMENT OF PUNJAB GOVERNMENT SERVANTS HOUSING SCHEME AT RAWALPINDI.

TITLE: **MASTER PLAN**

SCALE: N.T.S

DATE:

DWG. NO. **M.P-01**

JOB NO.

WATER SUPPLY SYSTEM

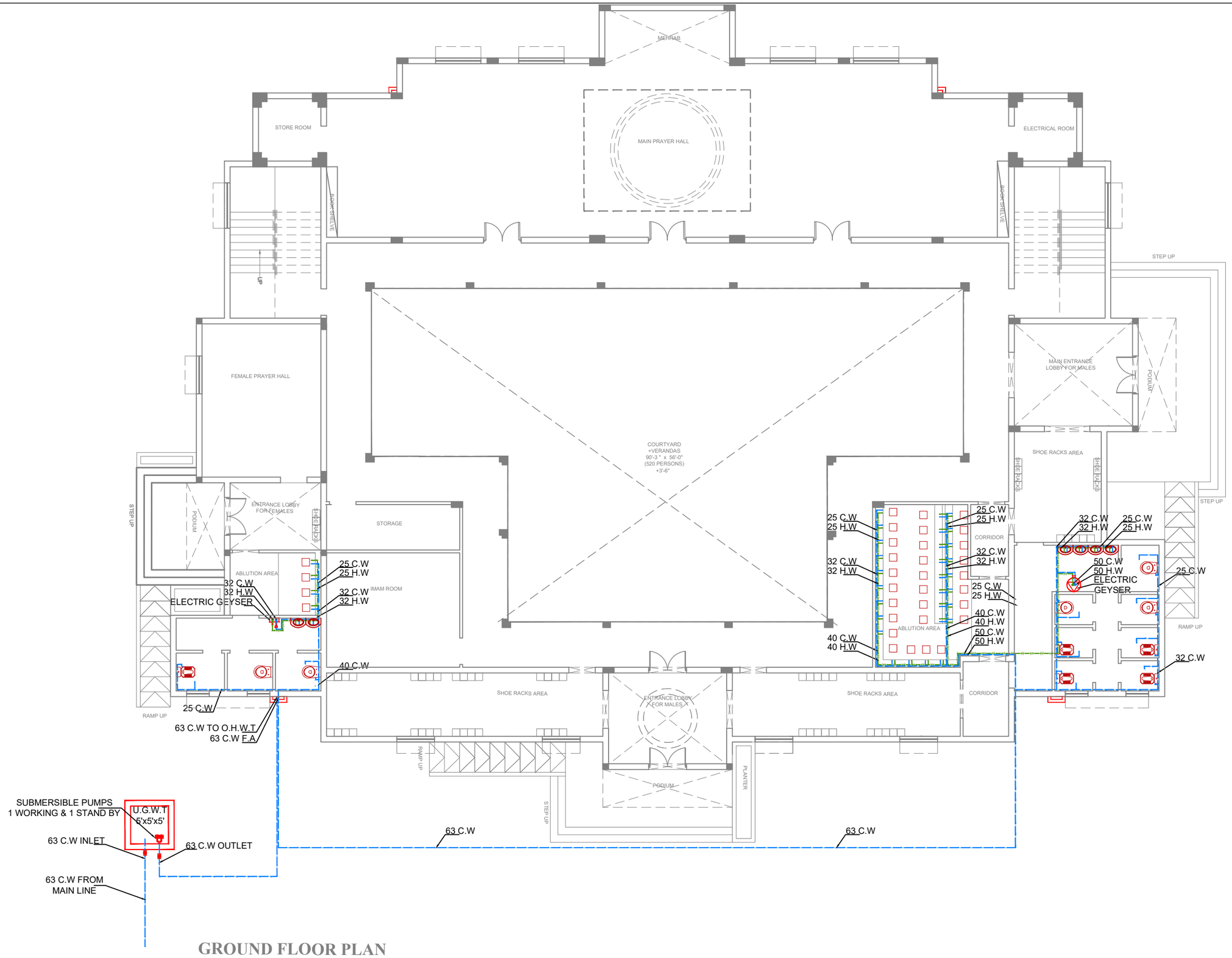

GROUND FLOOR PLAN

REV.	DATE	DESCRIPTION	APPROVED		
04				DRAWN	
03				SUBMITTED	
02				RECOMMENDED	
01				CHD./VER.	

CLIENT:

PUNJAB GOVERNMENT SERVANTS HOUSING FOUNDATION

CONSULTANT:

HA CONSULTING
ARCHITECTS, ENGINEERS & PLANNERS
Address: H # 10-Block D2, First Floor Johar Town, Lahore, Pakistan.
Tel: +92 42 35182103-4
Email: info@haconsulting.co
Web: www.haconsulting.co

PROJECT:

ESTABLISHMENT OF PUNJAB GOVERNMENT SERVANTS HOUSING SCHEME AT RAWALPINDI.

TITLE:

WATER SUPPLY SYSTEM (GROUND FLOOR PLAN)

SCALE: N.T.S

DATE:

DWG. NO.: **WS-G.F**

JOB NO.

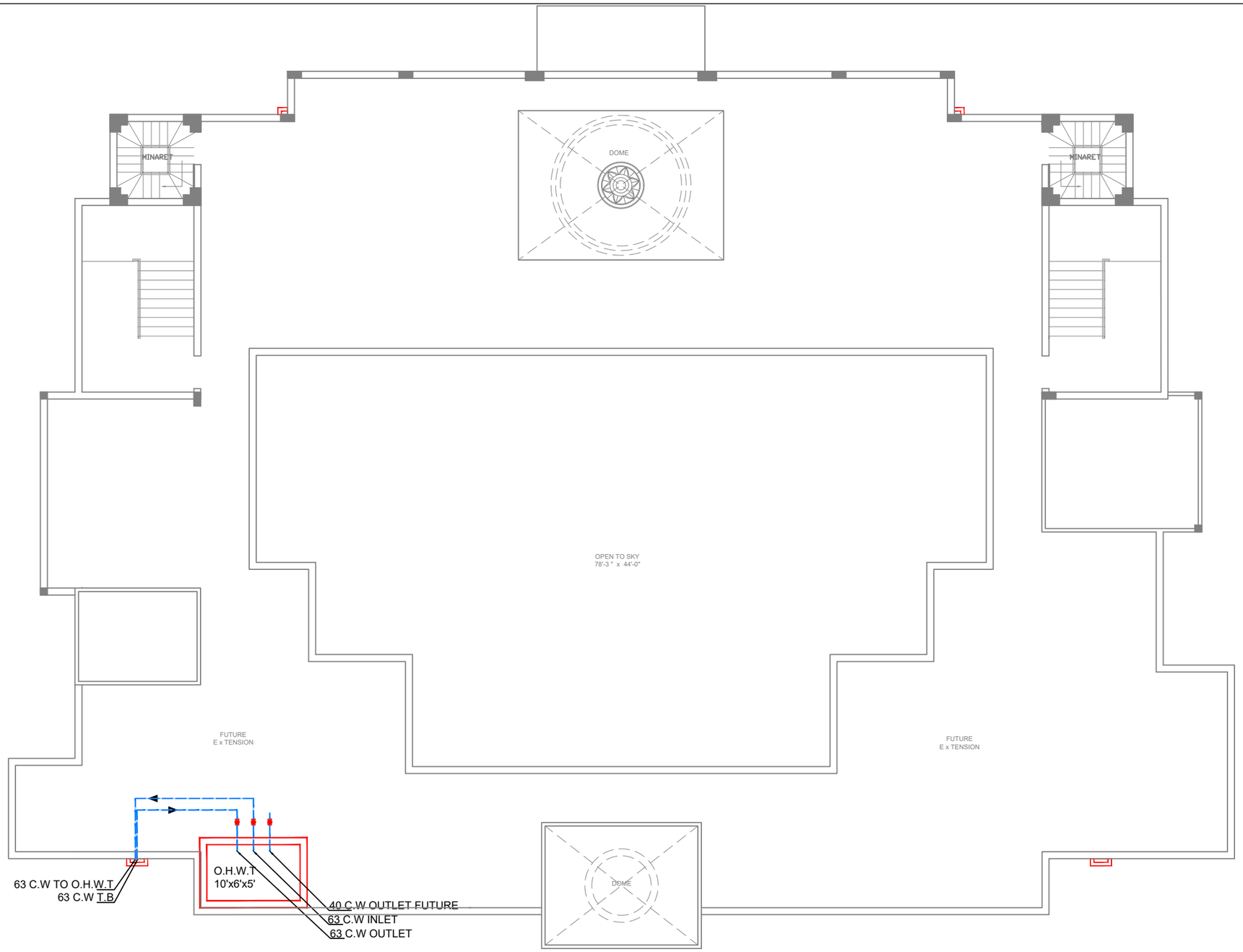

ROOF TOP FLOOR PLAN

REV.	DATE	DESCRIPTION	APPROVED		
04				DRAWN	
03				SUBMITTED	
02				RECOMMENDED	
01				CHD./VER.	
				APPROVED	

CLIENT:

PUNJAB GOVERNMENT SERVANTS HOUSING FOUNDATION

CONSULTANT:

HA CONSULTING
ARCHITECTS, ENGINEERS & PLANNERS
Address: H # 10-Block D2, First Floor Johar Town, Lahore, Pakistan.
Tel: +92 42 35182103-4
Email: info@haconsulting.co
Web: www.haconsulting.co

PROJECT:

ESTABLISHMENT OF PUNJAB GOVERNMENT SERVANTS HOUSING SCHEME AT RAWALPINDI.

TITLE:

WATER SUPPLY SYSTEM (TOP ROOF PLAN)

SCALE: N.T.S

DATE:

DWG. NO. **WS-T.F**

JOB NO.

SEWERAGE SYSTEM

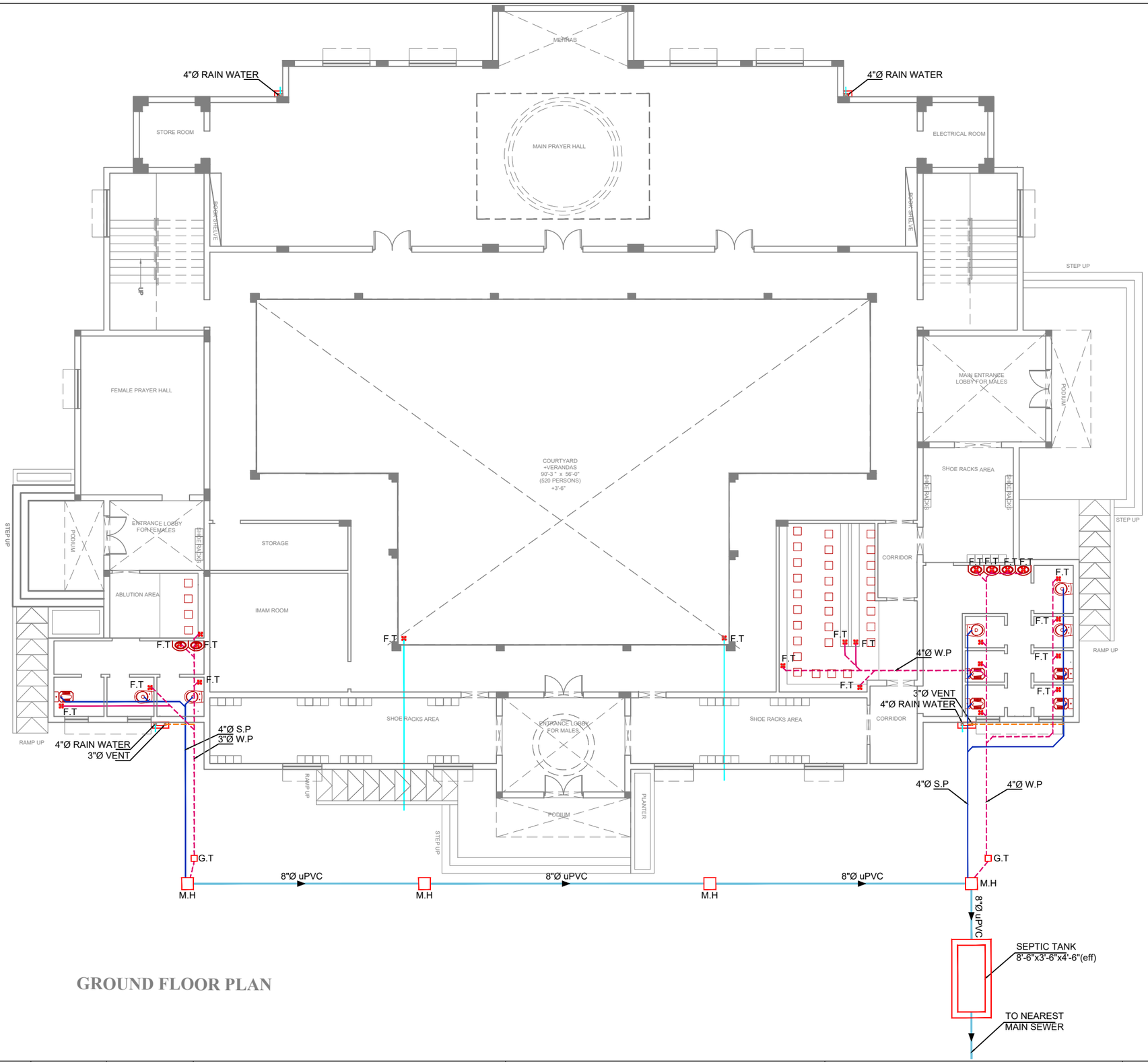

GROUND FLOOR PLAN

REV.	DATE	DESCRIPTION	APPROVED		
04				DRAWN	
03				SUBMITTED	
02				RECOMMENDED	
01				CHD./VER.	

CLIENT:

PUNJAB GOVERNMENT SERVANTS HOUSING FOUNDATION

CONSULTANT:

HA CONSULTING
ARCHITECTS, ENGINEERS & PLANNERS
Address: H # 10-Block D2, First Floor Johar Town, Lahore, Pakistan.
Tel: +92 42 35182103-4
Email: info@haconsulting.co
Web: www.haconsulting.co

PROJECT:

ESTABLISHMENT OF PUNJAB GOVERNMENT SERVANTS HOUSING SCHEME AT RAWALPINDI.

TITLE:

SEWERAGE SYSTEM SYSTEM (GROUND FLOOR PLAN)

SCALE: N.T.S

DATE:

DWG. NO. **SW-G.F**

JOB NO.

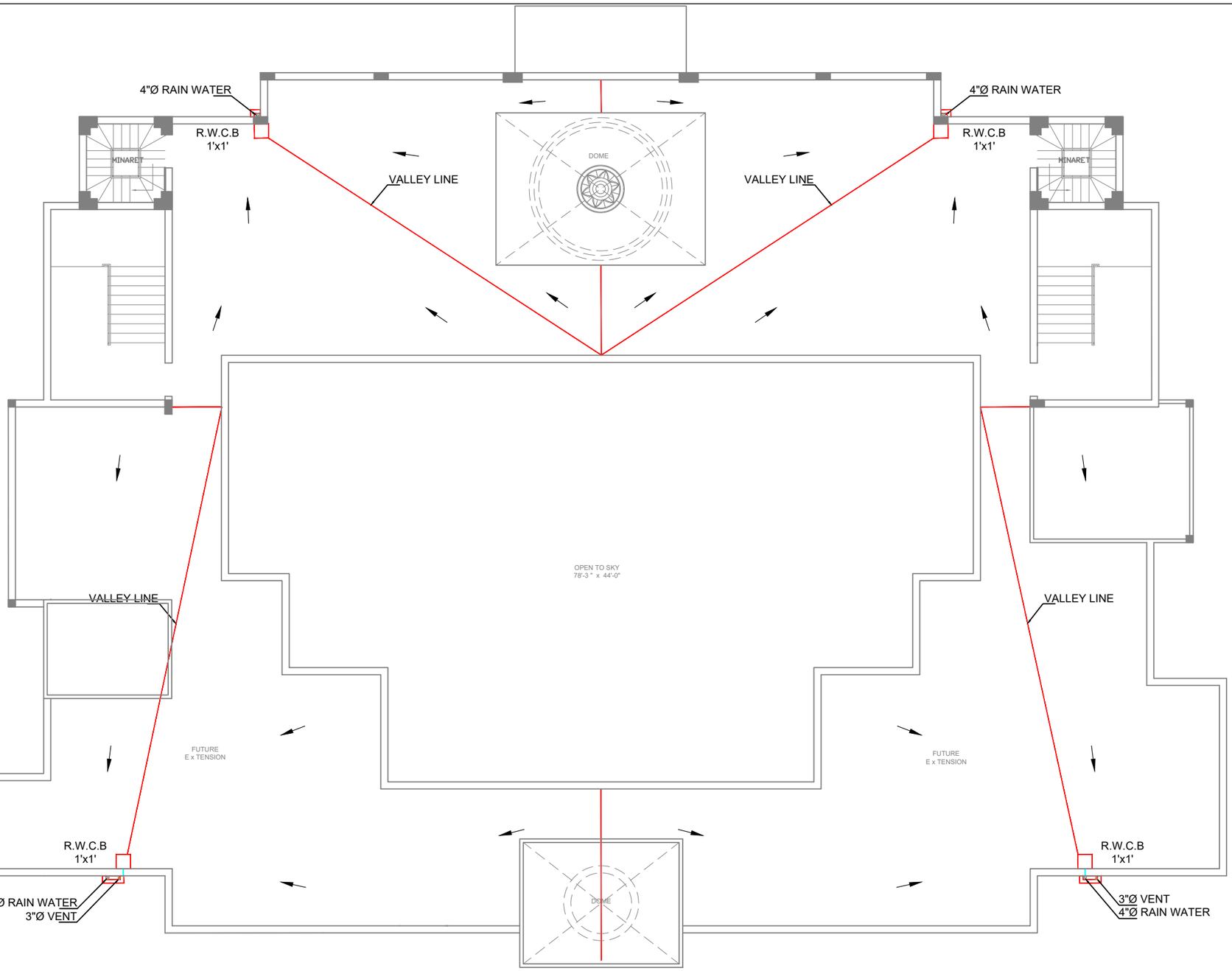

ROOF TOP FLOOR PLAN

REV.	DATE	DESCRIPTION	APPROVED	
04				DRAWN
03				SUBMITTED
02				RECOMMENDED
01				CHD./VER.
				APPROVED

CLIENT:

PUNJAB GOVERNMENT SERVANTS HOUSING FOUNDATION

CONSULTANT:

HA CONSULTING
ARCHITECTS, ENGINEERS & PLANNERS
Address: H # 10-Block D2, First Floor Johar Town, Lahore, Pakistan.
Tel: +92 42 35182103-4
Email: info@haconsulting.co
Web: www.haconsulting.co

PROJECT:

ESTABLISHMENT OF PUNJAB GOVERNMENT SERVANTS HOUSING SCHEME AT RAWALPINDI.

TITLE:

DRAINAGE SYSTEM (TOP ROOF PLAN)

SCALE: N.T.S

DATE:

DWG. NO. **SW-T.F**

JOB NO.